Colour television

Chassis

Service
Service
Service

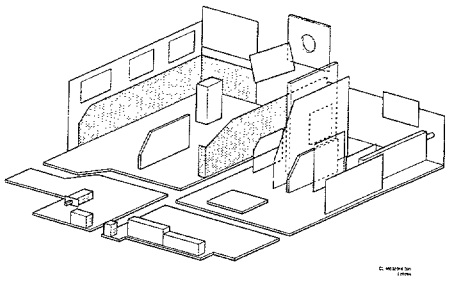

FL2.24
FL2.26
FL4.27

AA

ServiceManual

Contents

			Page	
1.	Technical data		2	
2.	Connection facilities and chassis overview		2	
3.	Warnings and notes		3	
4.	Mechanical instructions		3	
5.	Block diagram		4	
6.	*Electrical diagrams and PWB lay-out*		*Diagram*	*PWB*
	Tuner, source selection	(Diagram C)	7	6
	Synchronisation and deflection (FLx.26/.27)	(Diagram B)	8	17
	Video processing	(Diagram D)	9	6
	Synchronisation and deflection (FLx.24)	(Diagram B)	10	19
	Sound processing	(Diagram F)	11	6
	Power supply (FLx.26/.27)	(Diagram A)	12	17
	Control	(Diagram H)	13	6
	Power supply (FLx.24)	(Diagram A)	14	19
	Picture tube panel	(Diagram E)	15	15
	Sound power amplifier	(Diagram G)	16	17,19
	Y/C detector	(Diagram I)	18	18
	SCAVEM filter (+ picture rotation 16:9)	(Diagram Y)	18	18
	SCAVEM amplifier	(Diagram Z)	18	18
	NICAM decoder	(Diagram K)	20	20
	PiP (Picture in Picture)	(Diagram J)	21	20
	100 Hz Digital Scan (FLx.24/.26)	(Diagram M)	22	23
	Teletext (FLx.24/.26)	(Diagram L)	23	23
	100 Hz/Teletext (FLx.27)	(Diagram L')	24	24
	Comb filter	(Diagram N)	25	25
	Black Stretch	(Diagram D')	26	26
	North / South correction 29" (N/S)	(Diagram B')	26	26
	Interface EURO AV3	(Diagram P)	26	26
	Connector EURO AV3	(Diagram R)	26	26
7.	Electrical adjustments		27	
8.	Fault finding methods and repair tips		29	
9.	Direction for use		31	
10.	Electrical parts list		33	

Published by Consumer Electronics Printed in The Netherlands ©Copyright reserved Subject to modification GB 4822 727 20266

1. Technical data

Mains voltage	: 220 - 240 V (± 10%)
	: 50 Hz - 60 Hz (± 5%)
Aerial input impedance	: 75 Ω - koaxial
Minimum aerial voltage	: 30 µV (VHF), 40 µV (UHF)
Maximum aerial voltage VHF/S/UHF	: 180 mV
Programmes	: 0 - 99
VCR programmes	: 0, 50 - 99

2. Connection facilities and Chassis overview

FL1

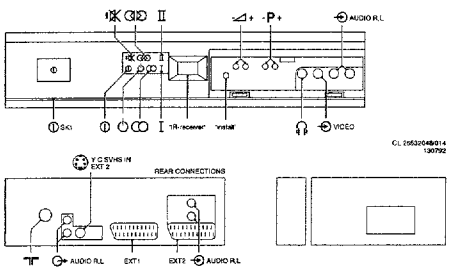

FL2

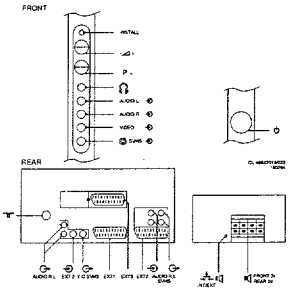

FL4

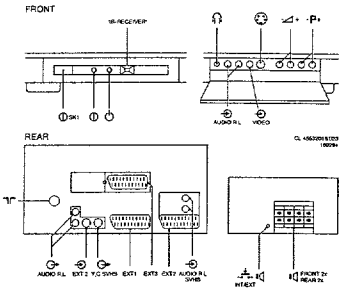

Specification of the connectors

EXT1 (AUX): RGB+CVBS

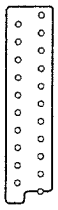

1 -Audio ⊖→ R(0,5VRMS ≤ 1kΩ)
2 -Audio ⊕ R(0,2-2VRMS ≥ 10kΩ)
3 -Audio ⊖→ L(0,5VRMS ≤ 1kΩ)
4 -Audio ⊥
5 -Blue ⊥
6 -Audio ⊕ L(0,2-2VRMS ≥ 10kΩ)
7 -Blue (0,7Vpp/75Ω)
8 -CVBS-status ⊕ 0-2V: INT
4,5-7V: EXT 16:9
9,5-12V: EXT 4:3
9 -Green ⊥
10 --
11 -Green (0,7Vpp/75Ω)
12 --
13 -Red ⊥
14 -RGB-status
15 -Red (0,7Vpp/75Ω)
16 -RGB-status (0-0,4V: INT)
(1-3V: EXT/75Ω)
17 -CVBS ⊥
18 -CVBS ⊥
19 -CVBS ⊖→ (1Vpp/75Ω)
20 -CVBS ⊕ (1Vpp/75Ω)
21 -Earthscreen

EXT2 (VCR): Y/C+CVBS

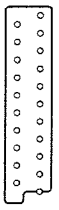

1 -Audio ⊖→ R(0,5VRMS ≤ 1kΩ)
2 -Audio ⊕ R(0,2-2VRMS ≥ 10kΩ)
3 -Audio ⊖→ L(0,5VRMS ≤ 1kΩ)
4 -Audio ⊥
5 --
6 -Audio ⊕ L(0,2-2VRMS ≥ 10kΩ)
7 --
8 -CVBS-status ⊕ 0-2V: int
4,5-7V: EXT 16:9
9,5-12V: EXT 4:3
⊕ 4,5: EXT 16:9
9 --
10 --
11 --
12 --
13 -CHROMA ⊥
14 --
15 -CHROMA ⊕ (1Vpp/75Ω)
16 --
17 -CVBS ⊥
18 -CVBS ⊥
19 -CVBS ⊖→ (1Vpp/75Ω)
20 -CVBS/Y ⊕ (1Vpp/75Ω)
21 -Earthscreen

EXT3: CVBS

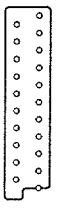

1 --
2 -Audio ⊕ R(0,2-2VRMS ≥ 10k
3 --
4 -Audio ⊥
5 --
6 -Audio ⊕ L(0,2-2VRMS ≥ 10k
7 --
8 --
9 --
10 --
11 --
12 --
13 --
14 --
15 --
16 --
17 --
18 -CVBS ⊥
19 --
20 -CVBS ⊕ (1Vpp/75Ω)
21 -Earthscreen

EXT2 (SVHS) (rear)

SVHS
1 - ⊥
2 - ⊥
3 - Y ⊕ (1Vpp; 75Ω)
4 - C ⊕ (0,3Vpp; 75Ω)

◎ CINCH Audio ⊕ L(0,5VRMS; ≥ 10kΩ)
◎ CINCH Audio ⊕ R(0,5VRMS; ≥ 10kΩ)

EXT3 (front)

◎ CINCH Video ⊕ 300mVpp/75Ω
◎ CINCH Audio ⊕ L(0,5VRMS; ≥ 10kΩ)
◎ CINCH Audio ⊕ R(0,5VRMS; ≥ 10kΩ)

3.5mm 32-2000Ω ≥ 10mW

Audio out (rear)

◎ CINCH Audio ⊖→ L(0,5VRMS; ≤ 1kΩ)
◎ CINCH Audio ⊖→ R(0,5VRMS; ≤ 1kΩ)

Erratum

GB

In this reprinted service manual the following diagrams have been replaced:

Diagram		Page
Block diagram		4
Source Select	(Diagram C)	7
Synchronisation FLx.26/.27	(Diagram B)	8
Video processing	(Diagram D)	9
Synchronisation FLx.24	(Diagram B)	10
Sound Processing	(Diagram F)	11
Power supply FLx.26/.27	(Diagram A)	12
SCAVEM	(Diagram Z)	18
PiP	(Diagram J)	21
LFR box	(Diagram M)	22

The following Service Informations are included:

FL 94.03
FL 94.05

Corrections to Chapter 7

Paragraph 3.2 and 3.4

Actual	Must be
(fig. 7.9)	(fig. 7.4)
7.64µs	6.4µs
Figure 7.4	
744µs ± 175ns	6.4µs ± 175ns

Corrections to Chapter 8

Paragraph 5

In some versions it is not possible to re-route the signal path after removing the PiP module because of the use of different connectors.

Paragraph 8.4.1 and 8.4.2

Error message 99 (software protection) is not indicated by the LED's any more.
In case of hardware protection the set switches to stand-by and back on again, once in every few seconds.
Just before switching to stand-by, in case of protection, both red and green LED's light up.

Erratum

(D)

In diese Nachdruck der Service Manual sind die folgende Schaltbilder geändert worden.

Schaltbild		Seite
Blockschaltbild		4
Quellenwahl	(Schaltbild C)	7
Synchronisierung FLx.26/.27	(Schaltbild B)	8
Video Verarbeitung	(Schaltbild D)	9
Synchronisierung FLx.24	(Schaltbild B)	10
Ton Verarbeitung	(Schaltbild F)	11
Stromversorgung FLx.26/.27	(Schaltbild A)	12
SCAVEM	(Schaltbild Z)	18
Bild im Bild	(Schaltbild J)	21
LFR box	(Schaltbild M)	22

Die folgenden Service Informationen sind Beigeliefert:

FL 94.03
FL 94.05

Korrekturen zur Kapitel 7

Paragraph 3.2 und 3.4

Jetzt	Muß sein
(Abb. 7.9)	(Abb. 7.4)
7.64µs	6.4µs
Abbildung 7.4	
744µs ± 175ns	6.4µs ± 175ns

Korrekturen zur Kapitel 8

Paragraph 5

In manche Versionen ist es nicht möglich um das Signal durch zu fuhren, wenn das Bild im Bild Modul entfernt ist, weil unterschiedliche Stecker gebraucht worden sind.

Paragraph 8.4.1 und 8.4.2

Fehlermeldung 99 (Software-Schutz) wird nicht mehr angezeigt von der LED's.
Wenn die Hardware-Schutz aktiv ist, schaltet das Gerät zu Stand-by und wieder ein, mit ein Frequenz von einmal in einige Sekunden.
Kurz bevor das Gerät zu Stand-by geschaltet wird, leuchten beide LED's gleichzeitig auf.

Chassis overview

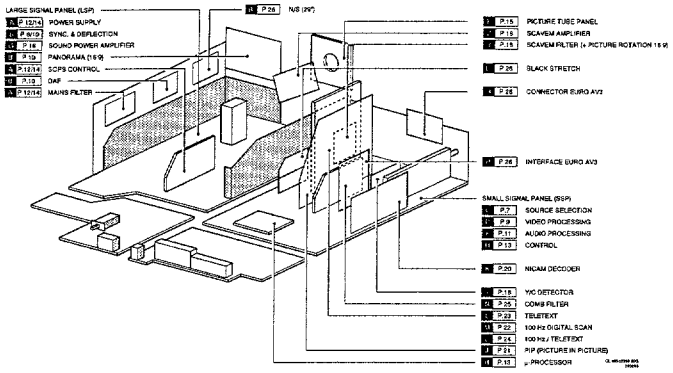

3. Warnings and Notes

Warnings

1. Safety regulations require that the unit should be returned in its original condition and that components identical to the original components are used. The safety components are indicated by the symbol ⚠.

2. In order to prevent damage to ICs and transistors, all high-voltage flashovers must be avoided. In order to prevent damage to the picture tube, the method shown in Fig. 3.1 should be used to discharge the picture tube. Use a high-voltage probe and a multimeter (position DC-V). Discharge until the meter reading is OV (after approx. 30s).

3. **ESD**

   All ICs and many other semiconductors are sensitive to electrostatic discharges (ESD). Careless handling during repair can drastically shorten the life. Make sure that during repair you are connected by a pulse band with resistance to the same potential as the earth of the unit. Keep components and tools also at this same potential.

4. When repairing a unit, always connect it to the mains voltage via an isolating transformer.

5. Be careful when taking measurements in the high-voltage section and on the picture tube.

6. Never replace modules or other components while the unit is switched on.

7. It is recommended that safety goggles are worn when replacing the picture tube.

8. When making settings, use plastic rather than metal tools. This will prevent any short circuits and the danger of a circuit becoming unstable.

9. After repair the wiring should be fastened once more in the cable clamps for this purpose.

10. In order to prevent measuring errors, the heat sinks should not be used as reference points for measurements. **The heat sink for the sound output amplifier is connected to the -16/-11 volts.**

11. On this unit the 140 volt supply voltage is not supplied via an interconnection on the deflection yoke to the line output transformer. When the deflection cable is detached, the +140 volt supply remains loaded. In order to unload the +140 volts, coil 5511 should be removed.

12. Together with the deflection unit and any multipole unit, the flat square picture tubes used form an integrated unit. The deflection and the multipole units are set optimally at the factory. Adjustment of this unit during repair is therefore not recommended.

Notes

1. The direct voltages and oscillograms should be measured with regard to the tuner earth (⊥), or hot earth (⊥) as this is called.

2. The direct voltages and oscillograms shown in the diagrams should be measured in the **Service Default Mode** (see chapter 8) with a colour bar signal and stereo sound (L: 3 kHz, R: 1 kHz unless stated otherwise) and picture carrier at 475.25 MHz.

3. Where necessary, the oscillograms and direct voltages are measured with (⊓⊓) and without aerial signal (⋊) Voltages in the power supply section are measured both for normal operation (⏻) and in standby (⏼). These values are indicated by means of the appropriate symbols.

4. The picture tube PCB has printed spark gaps. Each spark gap is connected between an electrode of the picture tube and the Aquadag coating.

5. The semiconductors indicated in the circuit diagram and in the parts lists are completely interchangeable per position with the semiconductors in the unit, irrespective of the type indication on these semiconductors.

6. The connectors used for the modules (board to board) are gold-plated and should only be replaced by the same type.

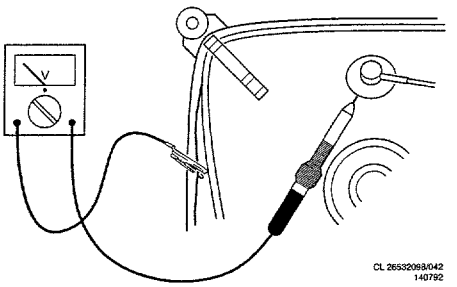

Fig. 3.1

4. Mechanical instructions

It is extremely important that following disassembly all cables are replaced in their original positions in order that safety and sound and picture quality may be guaranteed.

1. Model overview (fig. 1)

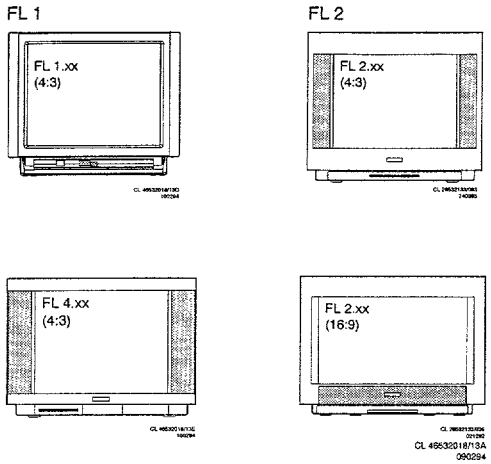

Fig. 4.1

2. Removing the rear panel (fig. 2 + 3)

Before the rear panel is removed the connection to the subwoofer should first be disconnected:
FL1: Open the flap in the rear panel. Disconnect the subwoofer cable. (connector L36)
FL2: Remove the three screws A with which the grille is fixed. Tap the grille downwards as indicated by arrow 1, so that the grille becomes loose. Remove the grille from the rear panel by pulling it in the direction indicated by arrow 2.
Disconnect the cable from the subwoofer as indicated by arrow 3. Remove screws B and C, and also screws D if present or lugs E for FL4.
Remove the rear panel from the set.

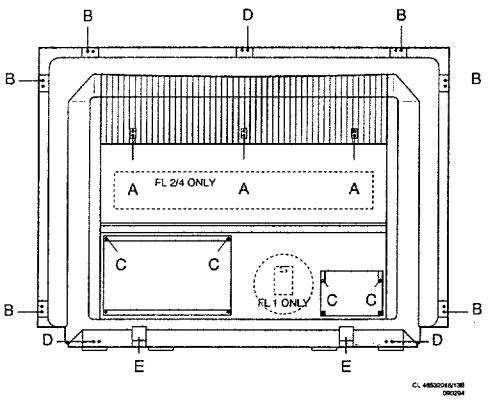

Fig. 4.2

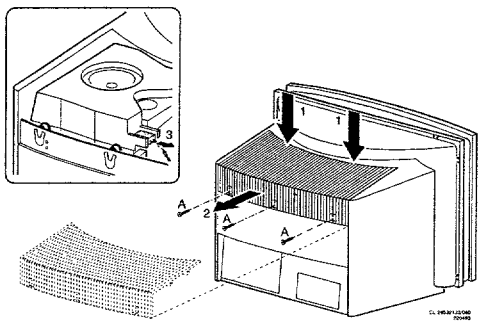

Fig. 4.3

3. Service positions FL1

FL1 can be placed in two service positions. (Fig. 4)
Remove the rear panel. Remove the screw behind the flap on the front side of the set.

Service position 1:

If present, press down the lugs with which the chassis is secured and pull both panels simultaneously to the rear, removing any hindering cables from the cable ties if necessary. Place the panels vertically behind the set as illustrated in figure 4a.

Service position 2:

Disconnect connectors L01, L02 and L03 that connect the small (SSP) and large signal panel (LSP) together. Pull the panel concerned backwards out of the set. Using extension cable set 4822 320 20209 (fig.5) reconnect both panels together. Place the panel concerned behind the set as illustrated in figure 4b.

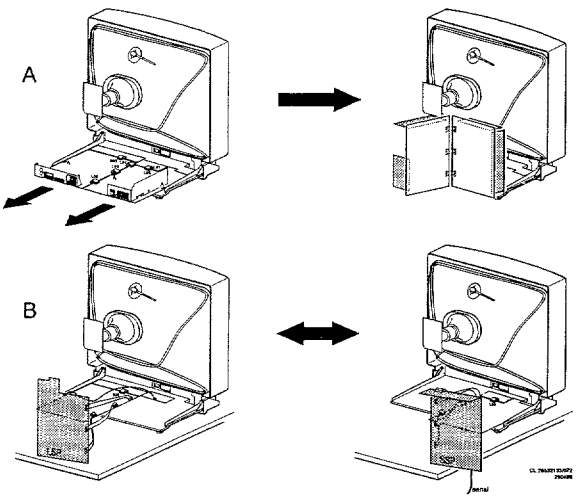

Fig. 4.4

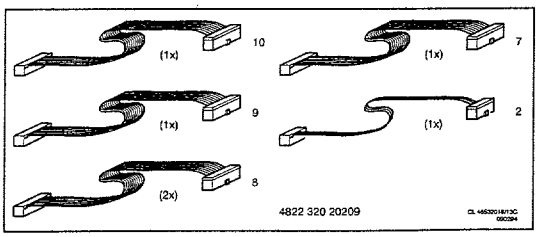

Fig. 4.5

4. Service positions FL2 (fig. 6)

FL2 can be placed in two service positions. (fig.6)
Remove the rear panel.

Service position 1:

Disconnect connectors E47 and E48. These connectors are located on the side of the set and connect the chassis with the audio, video and headphone connections (FRONT).
Lift the chassis frame at the rear and remove it from the cabinet, removing any hindering cables from the cable ties if necessary. Place the frame one position to the rear, taking care to ensure that the chassis frame lugs are located into the correct recesses.

Service position 2:

Place the chassis in service position 1.
Click the infra-red receiver (IR) out of the retainer located under the picture tube.
Remove the cables to the panel with buttons for

local operation from their ties and then click the operating panel out of its holder.
Disconnect the cable to the degaussing coil on the picture tube from the mains filter panel.
Remove the cables from and to the mains filter from their cable ties. Click the two service legs loose and place them vertically in the holes as indicated in the diagram. Tilt the entire chassis frame and place the entire unit on both service legs so that the solder side is accessible.

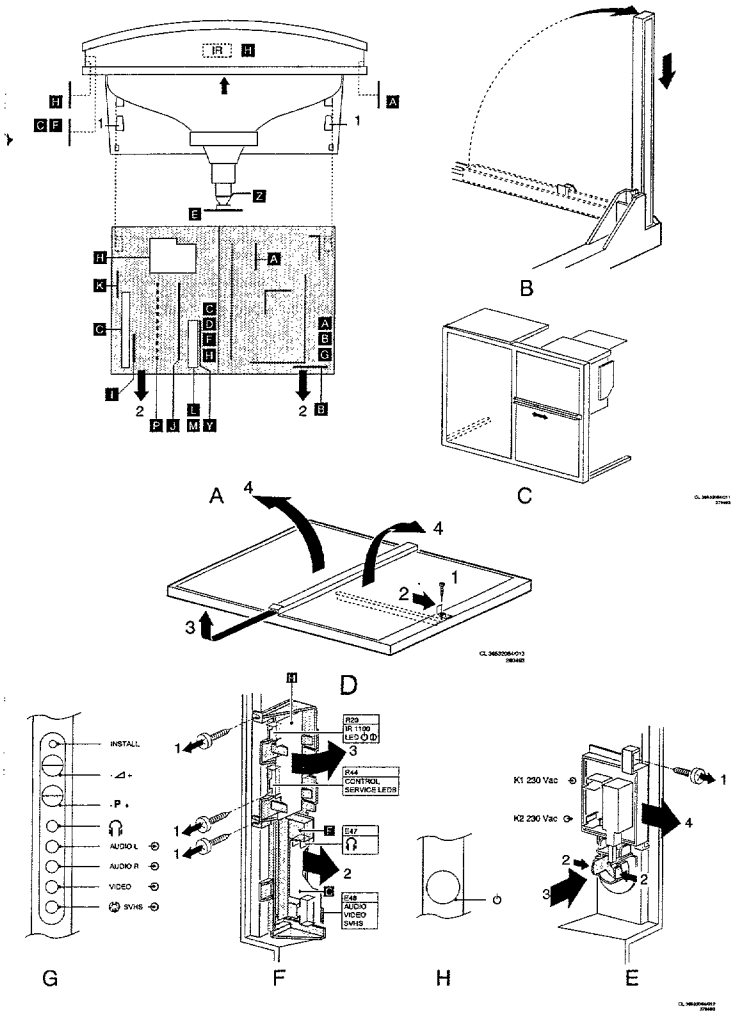

Fig. 4.6

5. Service position FL4 (fig. 7)

An FL4 model can be put into service position 1 in the same manner as an FL2 model.
Service position 2 is accomplished by tilting the whole frame once the cabling has been disconnected (the cable to the front connectors (E47, E48) may be disconnected). A stud on the frame and a hook on the case ensure a stable service position.

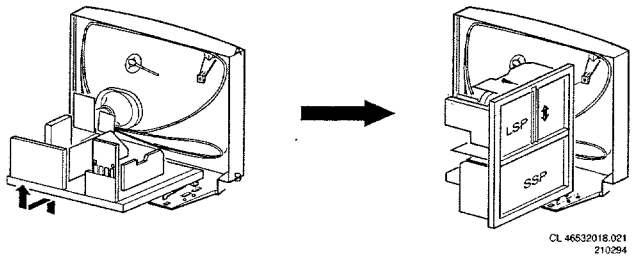

Fig. 4.7

6. Removing the mask from FL2 (fig. 8)

Remove the rear panel. Remove the chassis frame with the chassis from the cabinet.
Remove screws E as indicated in the diagram. Loosen the snap connection under the picture tube. Remove the masker in the manner illustrated in the diagram.

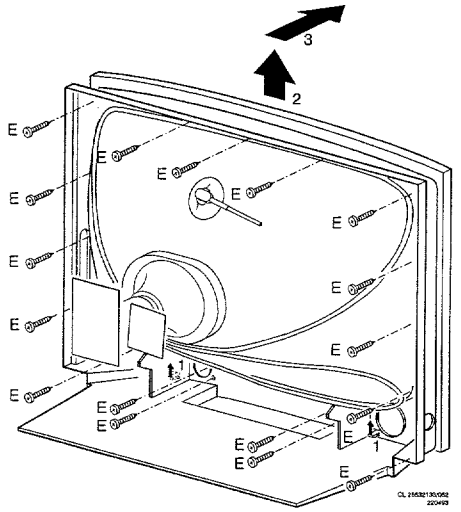

Fig. 4.8

7. Replacing the picture tube.

Remove the rear panel.
Discharge the picture tube in the manner described in chapter 3. Remove the chassis, or the chassis with the chassis frame from the cabinet. Disconnect all cabling to the picture tube. Tilt the set so that the front of the picture tube is pointing downwards, taking care that the picture tube comes to rest on a soft and clean surface. Loosen the four bolt on the picture tube corners and drop the cabinet gently down onto the work surface. The picture tube can now be removed from the cabinet.

In FL2 special nylon picture tube tubular rivets have been applied. In order to guarantee optimum strength these should not be re-used. Take care to fit correctly when replacing. Tighten the picture tube screws one-by-one until a torque of approximately 1kgm (10Nm) is achieved. The picture tube tubular rivets are obtainable under code numbers:
For 28" picture tubes and smaller: 4822 532 12243 (≤ 28")
For 29" picture tubes and larger: 4822 404 31294 (≥ 29")
Four tubular rivets are required per picture tube.

Blockdiagram / Blockschaltbild /

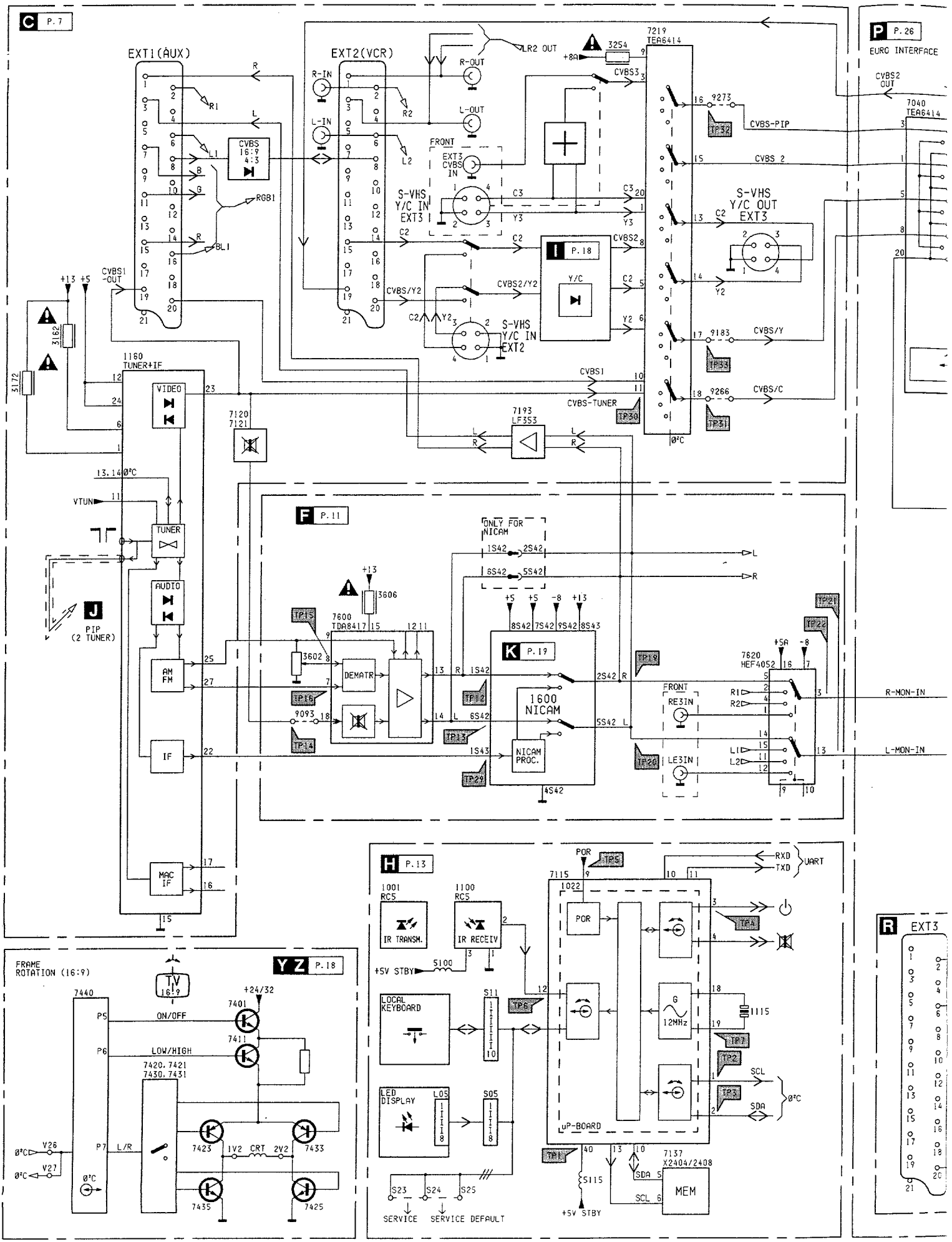

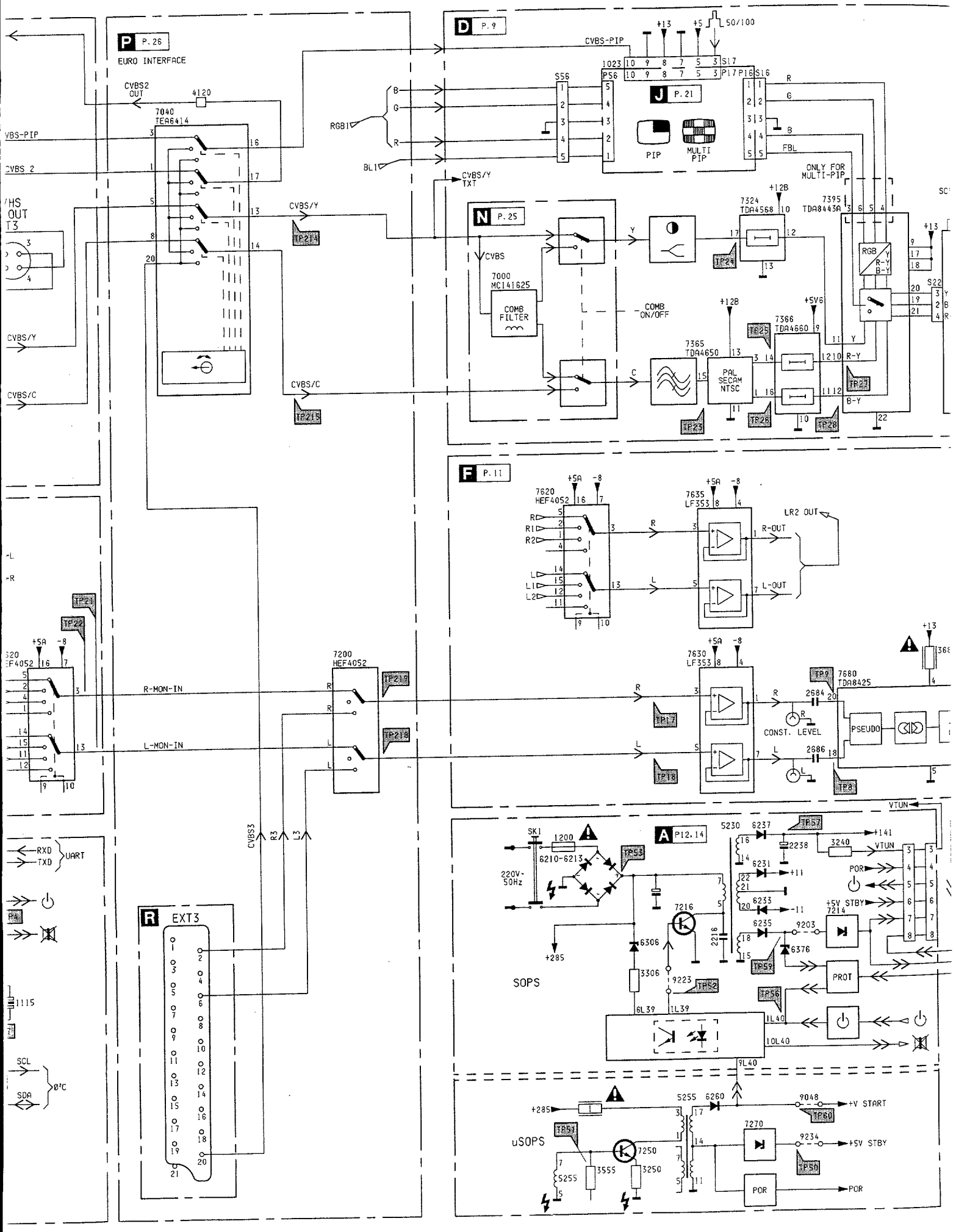
P P. 26
EURO INTERFACE
CVBS2 OUT
4120
7040 TEA6414
CVBS-PIP
CVBS 2
CVBS/Y
CVBS/C
D P. 9
CVBS-PIP
+13
+5
50/100
S56
PS6
S17
P17
P16
S16
J P. 21
PIP
MULTI PIP
RGB
R
G
B
FBL
BLI
CVBS/Y TXT
ONLY FOR MULTI-PIP
N P. 25
CVBS
7000 MC141625
COMB FILTER
COMB ON/OFF
7324 TDA4568
7395 TDA8443A
RGB
R-Y
B-Y
7365 TDA4650
PAL SECAM NTSC
7366 TDA4660
F P. 11
7620 HEF4052
7635 LF353
LR2 OUT
R-OUT
L-OUT
7200 HEF4052
R-MON-IN
L-MON-IN
7630 LF353
7680 TDA8425
CONST. LEVEL
PSEUDO
A P12.14
SK1
1200
6210-6213
220V-50Hz
7216
6306
3306
+285
SOPS
9223
6L39
1L39
1L40
10L40
9L40
5230
6237
2238
3240
VTUN
6231
6233
6235
9203
6376
7214
+5V STBY
POR
PROT
uSOPS
5255
6260
9048
+V START
7270
9234
7250
3555
3250
R EXT3
CVBS3
R3
L3
RXD
TXD
UART
SCL
SDA
TP21
TP22
TP23
TP24
TP25
TP26
TP27
TP28
TP29
TP214
TP215
TP216
TP217
TP218
TP50
TP51
TP52
TP53
TP54
TP55
TP56
TP57
TP58
TP59
TP60

Diagramme schématique

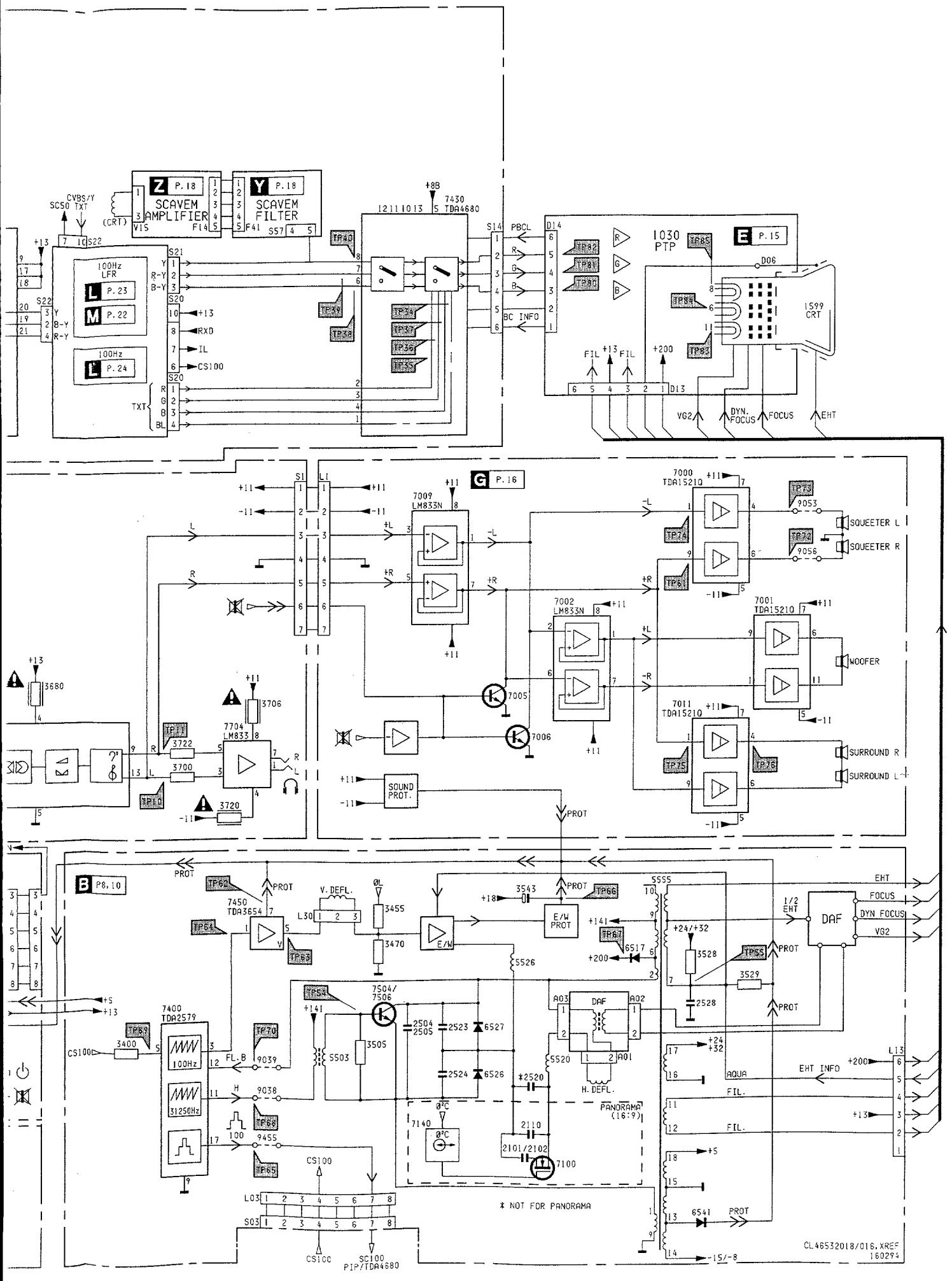

Small signal panel / Klein-signal Platte / Platine à petites signeaux

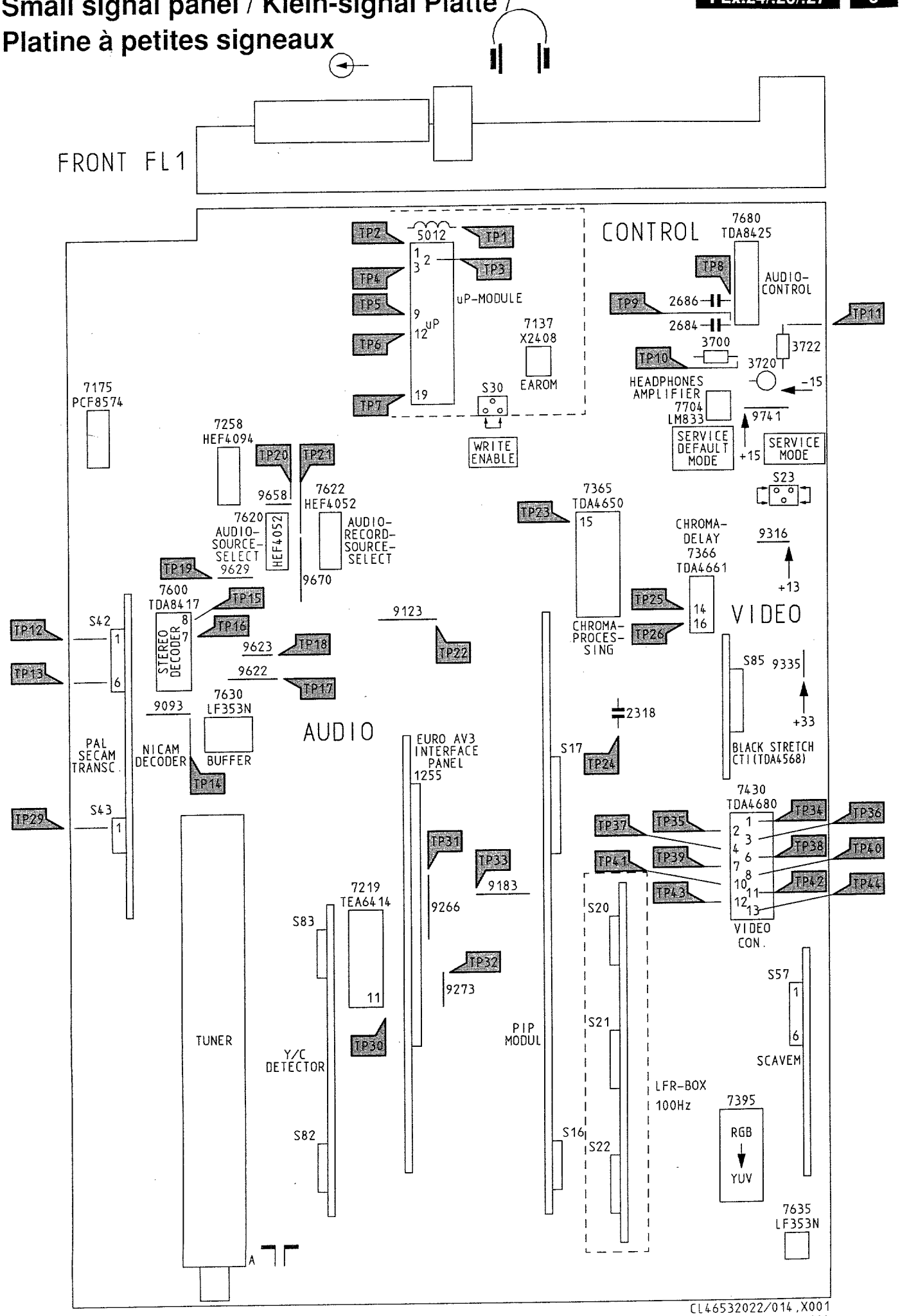

Large signal panel / Groß-signal Platte / Platine forts signeaux

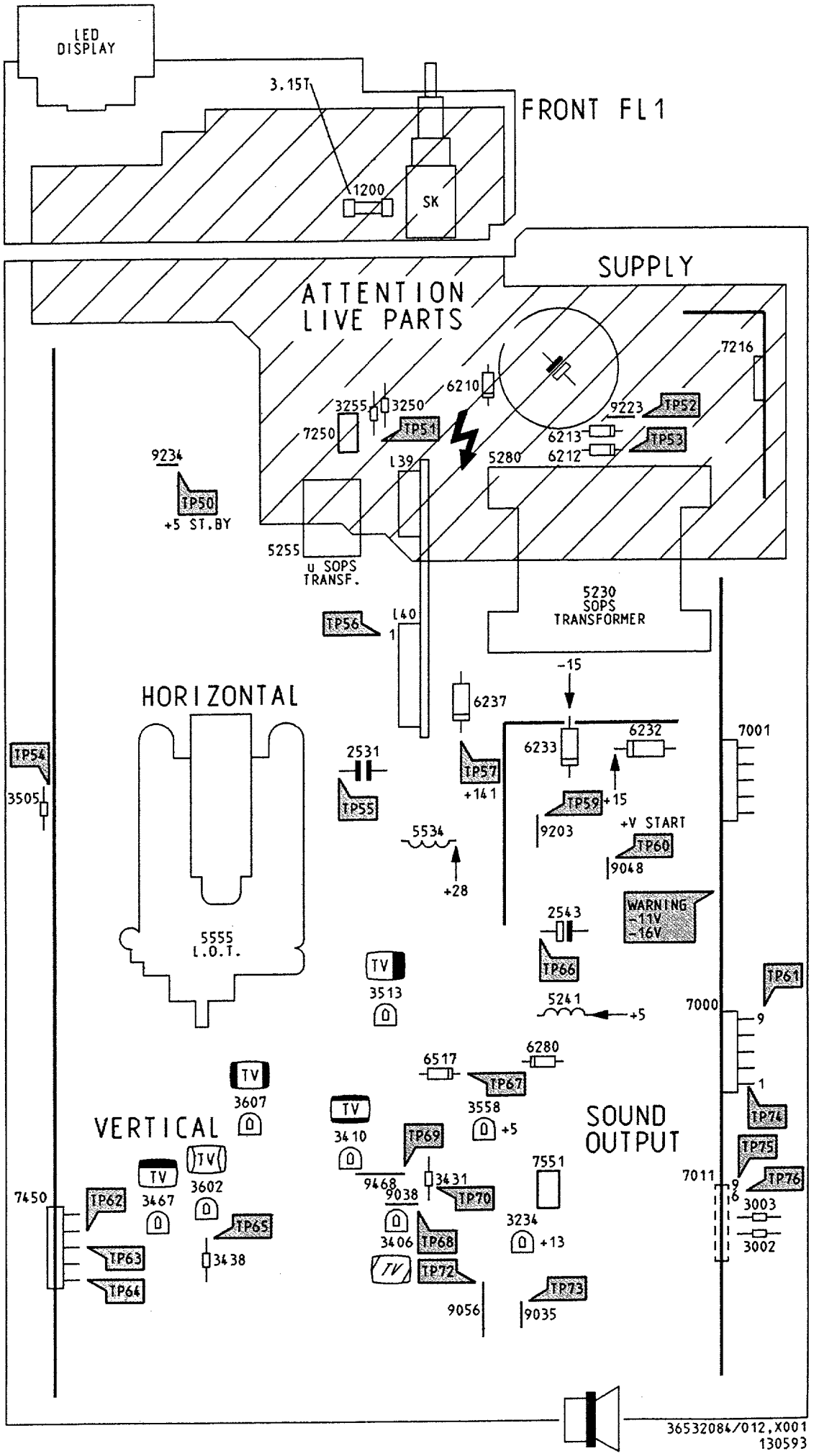

Oscillograms / Oscillogrammes

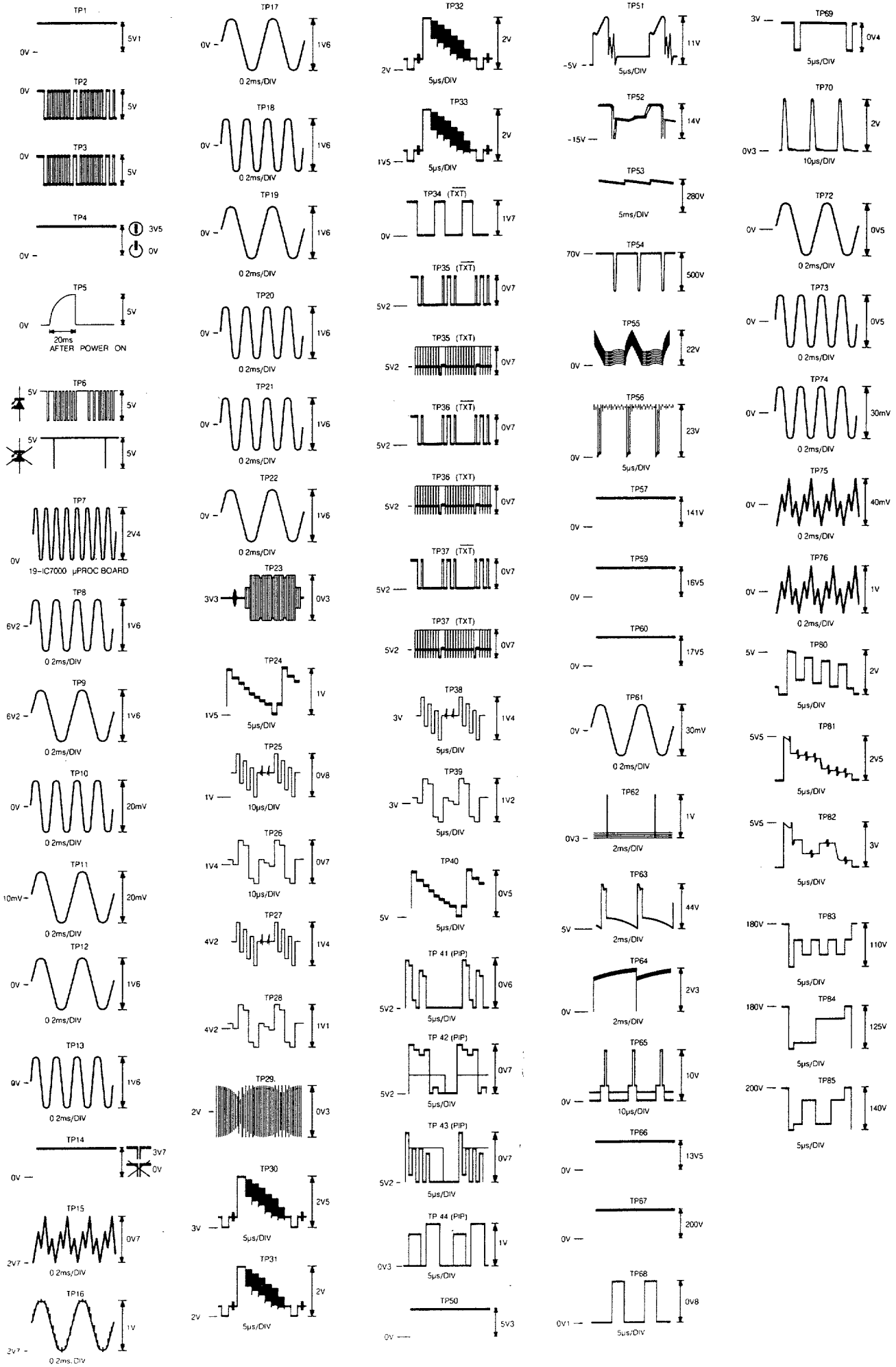

0V4
2V
0V5
0V5
30mV
40mV
1V
2V
2V5
3V
110V
125V
140V

Small signal panel / Klein-signal Platte / Platine à petites signeaux

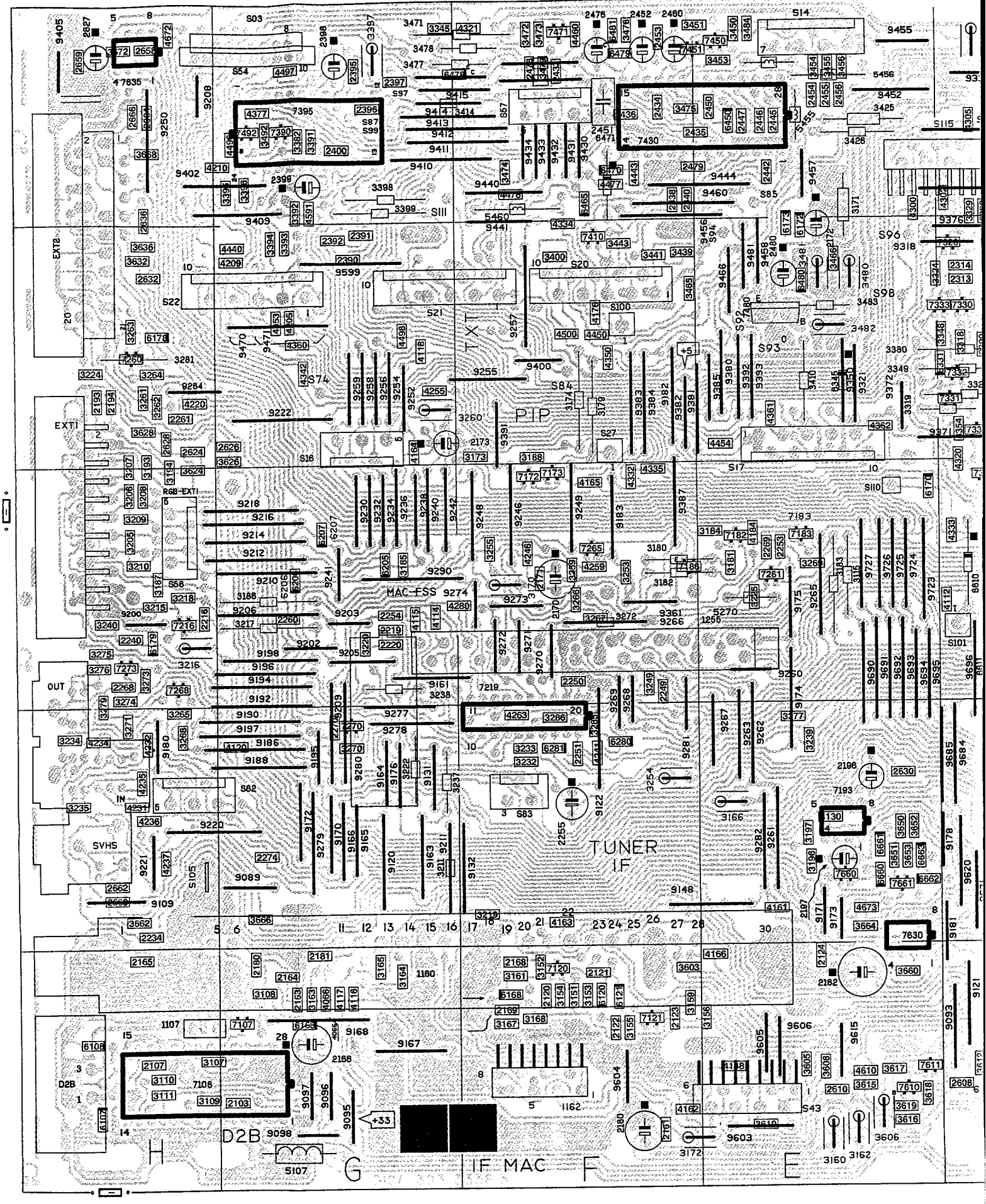

igneaux

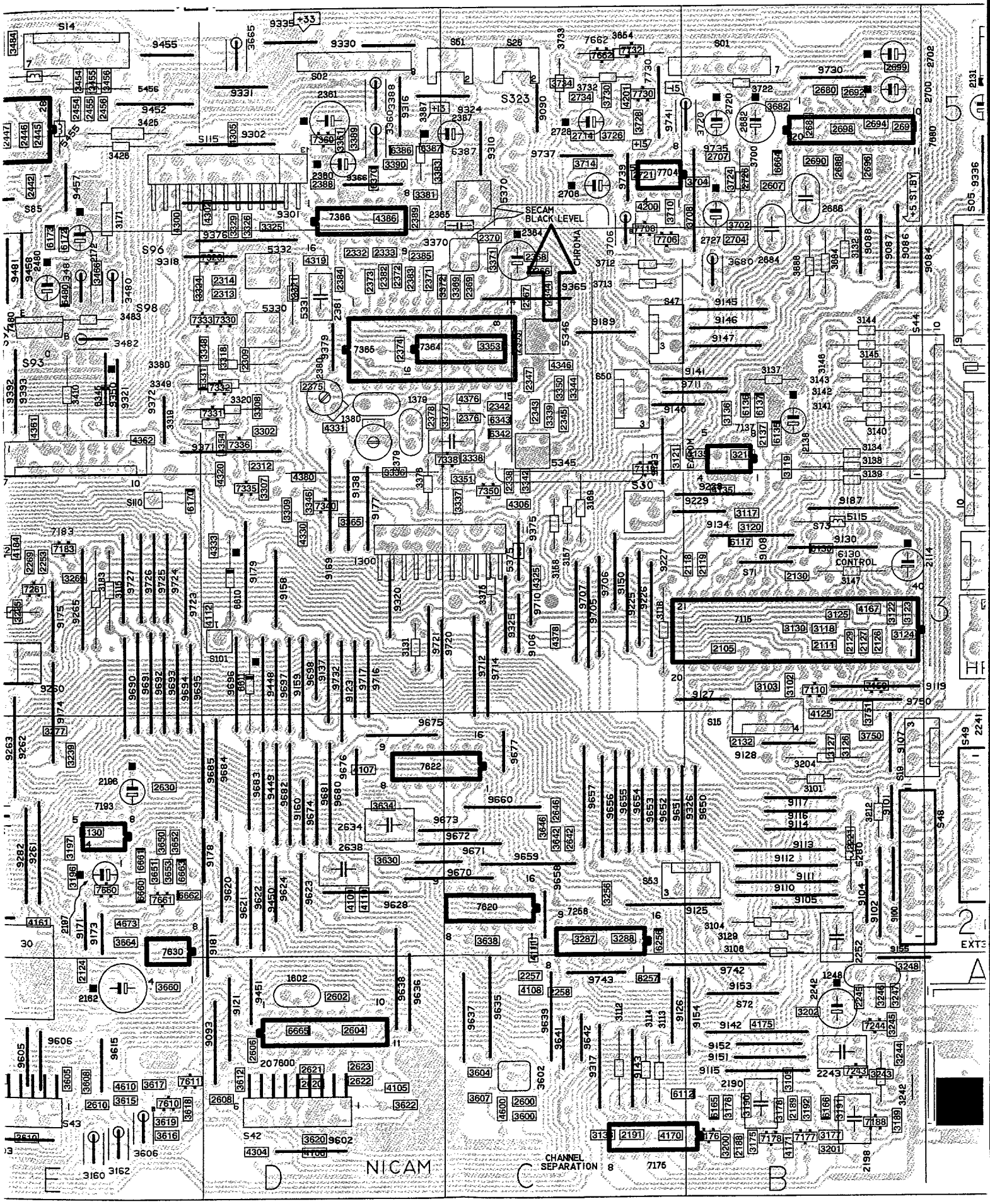
SECAM
BLACK LEVEL
CHROMA
NICAM
CHANNEL
SEPARATION
6130
CONTROL
EXT

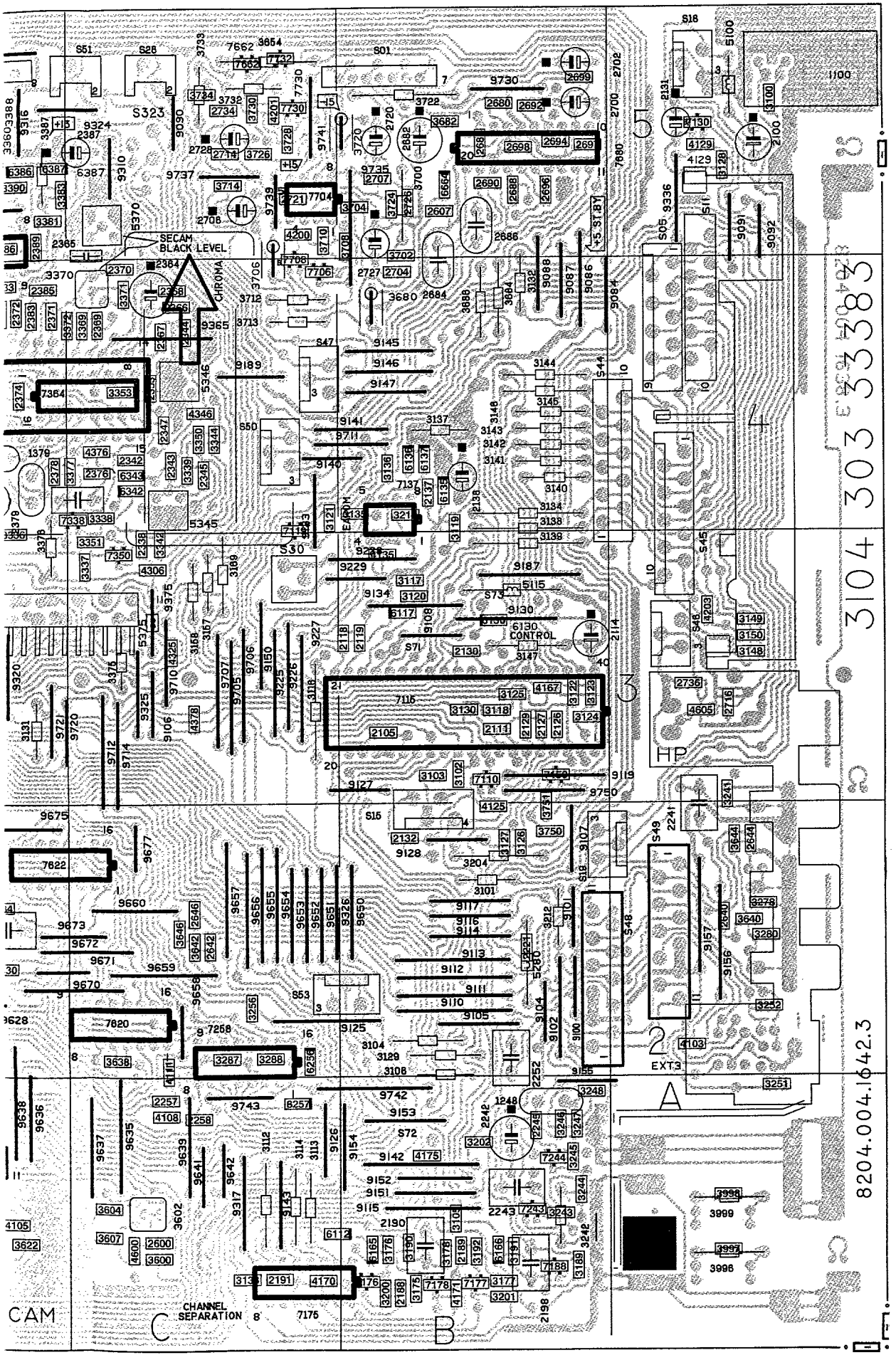

EXT1	H3	2332	D4	3100
EXT2	H4	2333	D4	3101
EXT3	A3	2338	C3	3102
D2B	H1	2342	C4	3103
SVHS	H2	2343	C4	3104
S01	C5	2344	C4	3105
S02	D5	2345	C4	3106
S03	H5	2347	C4	3107
S05	A5	2353	C4	3108
S11	A5	2360	D5	3109
S14	E5	2361	D5	3110
S15	B3	2364	C4	3111
S16	G4	2365	C5	3112
S17	E4	2366	C4	3113
S18	A5	2367	C4	3114
S19	B2	2368	C4	3115
S20	F4	2369	C4	3116
S21	F4	2370	C5	3117
S22	G4	2371	D4	3118
S26	C5	2372	D4	3119
S27	F4	2373	D4	3120
S42	D1	2374	D4	3121
S43	F1	2375	D4	3122
S44	B4	2376	C4	3123
S45	A4	2377	D4	3124
S46	A3	2378	D4	3125
S47	C4	2379	D4	3126
S48	B2	2380	D4	3127
S49	A2	2381	D4	3128
S50	C4	2382	D4	3129
S51	C5	2383	D4	3130
S53	B2	2384	D4	3131
S54	H5	2385	D4	3132
S56	H3	2387	D5	3133
S57	F5	2388	D5	3134
S82	H2	2389	D5	3135
S83	F2	2390	G4	3136
S100	F4	2391	G5	3137
S101	D3	2392	G4	3138
S105	H2	2395	G5	3139
S115	E5	2396	G5	3140
1100	A5	2397	G5	3141
1107	H1	2398	G5	3142
1160	E2	2399	G5	3143
1162	F1	2400	G5	3144
1248	B1	2433	F5	3145
1300	D3	2434	F5	3146
1379	D4	2435	F5	3147
1380	D4	2436	F5	3148
1602	D1	2438	F5	3149
2100	A5	2440	F5	3150
2103	H1	2442	E5	3151
2105	B3	2445	E5	3152
2107	H1	2446	E5	3153
2111	B3	2447	E5	3154
2114	B3	2450	F5	3155
2118	C3	2451	F5	3156
2119	B3	2452	F5	3157
2120	F1	2453	F5	3158
2121	F1	2454	E5	3159
2122	F1	2455	E5	3160
2123	F1	2456	E5	3161
2124	E1	2460	F5	3162
2126	B3	2476	F5	3163
2127	B3	2478	F5	3164
2129	B3	2479	F5	3165
2130	B3	2480	E4	3166
2131	A5	2600	C1	3167
2132	B2	2602	D1	3168
2137	B4	2604	D1	3169
2138	B4	2606	D1	3170
2160	F1	2607	B5	3171
2161	F1	2608	D1	3172
2162	E1	2610	E1	3173
2163	G1	2620	D1	3174
2164	G1	2621	D1	3175
2165	H1	2622	D1	3176
2166	G1	2623	D1	3177
2168	F1	2624	H4	3178
2169	F1	2626	H4	3179
2170	F3	2627	H5	3180
2171	F3	2628	H4	3181
2172	E5	2630	E2	3182
2173	G4	2632	H4	3183
2180	G1	2634	D2	3184
2181	G1	2636	H5	3185
2188	B1	2638	D2	3186
2189	B1	2640	A2	3187
2190	B1	2642	C2	3188
2191	C1	2644	A2	3189
2193	H4	2646	C2	3190
2194	H4	2658	H5	3191
2196	E2	2659	H5	3192
2197	E2	2660	H2	3193
2198	B1	2662	H2	3194
2216	H3	2664	H5	3196
2219	G3	2666	H5	3197
2220	G3	2680	B5	3200
2221	B2	2681	B5	3201
2234	H2	2682	B5	3202
2240	H3	2684	B5	3204
2241	A3	2686	B5	3205
2242	B1	2688	B5	3206
2243	B1	2690	B5	3207
2245	B1	2692	B5	3208
2249	F3	2694	B5	3209
2250	F3	2696	B5	3210
2251	F2	2697	B5	3211
2252	B2	2698	B5	3212
2253	E3	2699	B5	3213
2254	G3	2700	B5	3215
2255	F2	2702	B5	3216
2257	C1	2704	B4	3217
2258	C1	2706	C5	3218
2260	G3	2707	B5	3219
2261	H4	2714	C5	3220
2268	H3	2716	A3	3222
2269	E3	2720	B5	3224
2270	G2	2721	C5	3225
2274	G2	2726	B5	3232
2309	D4	2727	B5	3233
2312	D4	2728	C5	3234
2313	D4	2734	C5	3235
2314	D4	2736	A3	3237

3100	A5	3238	G3	3480	E4	4259	F3	7172	F3	9159	D3	9383	F4
3101	B2	3239	E2	3481	E4	4263	F2	7173	F4	9160	D2	9384	F4
3102	B3	3240	H3	3482	E4	4280	G3	7175	B1	9161	G3	9385	F4
3103	B3	3241	A3	3483	E4	4300	E5	7176	B1	9163	G2	9387	F3
3104	B2	3242	B1	3484	E5	4302	E5	7177	B1	9164	G2	9391	F4
3105	B1	3243	B1	3492	G5	4304	D1	7178	B1	9165	G2	9392	E4
3106	B2	3244	B1	3600	C1	4305	D5	7182	E3	9166	G2	9393	E4
3107	H1	3245	B1	3602	C1	4306	C3	7183	E3	9167	G1	9400	F4
3108	G1	3246	B1	3603	F1	4319	D4	7186	F3	9168	G1	9402	H5
3109	H1	3247	B1	3604	C1	4320	D4	7188	B1	9169	D3	9403	F5
3110	H1	3248	B1	3605	E1	4321	G5	7193	E2	9170	G2	9404	F5
3111	H1	3249	F3	3606	E1	4325	C3	7216	H3	9171	E2	9405	H5
3112	C1	3251	A1	3607	C1	4330	D3	7219	F2	9172	G2	9409	H5
3113	C1	3252	A2	3608	E1	4331	D4	7243	B1	9173	E2	9410	G5
3114	C1	3253	F3	3610	E1	4332	F3	7244	B1	9174	E3	9411	G5
3115	E3	3254	F2	3612	D1	4333	E3	7258	C1	9175	E3	9412	G5
3116	C3	3255	F3	3615	E1	4334	F5	7260	H4	9176	G2	9413	G5
3117	B3	3256	C2	3616	E1	4335	F4	7261	E3	9177	D3	9414	G5
3118	B3	3257	C1	3617	E1	4342	G4	7265	F3	9178	E2	9415	G5
3119	B4	3259	F3	3618	E1	4346	C4	7268	H3	9179	D3	9416	G5
3120	B3	3260	G4	3619	E1	4350	F4	7270	G2	9180	H2	9430	F5
3121	C4	3261	H4	3620	D1	4360	G4	7273	H3	9181	E2	9431	F5
3122	B3	3262	H4	3622	D1	4361	E4	7326	E4	9182	F4	9432	F5
3123	B3	3263	H4	3624	H4	4362	E4	7330	D4	9183	F3	9433	F5
3124	B3	3264	H4	3626	H4	4376	C4	7331	E4	9186	G2	9434	F5
3125	B3	3265	H3	3628	H4	4377	G5	7332	D4	9187	B3	9440	F5
3126	B2	3266	F3	3630	D2	4378	C3	7333	E4	9188	G2	9441	F5
3127	B2	3267	F3	3632	H4	4380	D4	7335	D3	9189	C4	9444	F5
3128	A5	3268	H2	3634	D2	4386	D5	7336	D4	9190	G2	9448	D3
3129	B2	3269	E3	3636	H4	4440	H4	7338	D4	9192	G3	9449	D2
3130	B3	3270	G2	3638	C2	4443	F5	7340	D3	9194	G3	9450	D2
3131	D3	3271	H2	3640	A2	4450	F4	7350	C3	9195	G2	9451	D1
3132	B4	3272	F3	3642	C2	4453	G4	7360	D5	9196	G3	9452	E5
3133	C1	3273	H3	3644	A2	4454	E4	7364	D4	9197	G2	9455	E5
3134	B4	3274	H3	3646	C2	4460	F5	7365	D4	9198	G3	9456	F5
3135	B4	3275	H3	3650	E2	4476	F5	7366	D5	9200	H3	9457	E5
3136	B4	3276	H3	3651	E2	4477	F5	7390	G5	9202	G3	9458	E4
3137	B4	3277	E2	3652	E2	4496	H5	7395	G5	9203	G3	9460	F5
3138	B4	3278	A2	3653	E2	4497	G5	7410	F4	9205	G3	9466	E4
3139	B4	3279	H3	3654	C5	4498	G4	7430	E5	9206	G3	9470	G4
3140	B4	3280	A2	3660	E1	4500	F4	7450	E5	9208	H5	9471	G4
3141	B4	3281	H4	3662	H2	4591	G5	7451	F5	9209	G2	9481	E4
3142	B4	3285	F2	3664	E2	4600	C1	7471	F5	9210	G3	9599	G4
3143	B4	3286	F2	3665	D5	4605	A3	7480	E4	9211	G2	9602	D1
3144	B4	3287	C2	3666	G2	4610	E1	7492	G5	9212	G3	9603	E1
3145	B4	3288	C2	3668	H5	4672	H5	7600	D1	9214	G3	9604	F1
3146	B4	3302	D4	3672	H5	4673	E2	7610	E1	9216	G3	9605	E1
3147	B3	3307	D3	3680	B4	5100	A5	7611	E1	9218	G3	9606	E1
3148	A3	3308	D4	3682	B5	5107	G1	7620	C2	9220	H2	9615	E1
3149	A3	3309	D3	3684	B4	5115	B3	7622	C2	9221	H2	9620	D2
3150	A3	3318	D4	3686	B4	5270	E3	7630	E1	9222	G4	9621	D2
3151	F1	3319	E4	3700	B5	5280	B2	7635	H5	9225	C3	9622	D2
3152	F1	3320	D4	3702	B5	5303	F5	7660	E2	9226	C3	9623	D2
3153	F1	3321	D4	3704	B5	5304	F5	7661	E2	9227	C3	9624	D2
3154	F1	3324	E4	3706	C5	5330	D4	7662	C5	9228	B3	9628	D2
3155	F1	3325	D5	3708	C5	5331	D4	7680	B5	9229	B3	9635	C1
3156	F1	3326	D5	3710	C5	5332	D4	7704	C5	9230	G3	9636	D1
3157	C3	3329	D5	3712	C4	5345	C4	7706	C5	9232	G3	9637	C1
3158	C3	3336	D4	3713	C4	5346	C4	7708	C5	9234	G3	9638	D1
3159	F1	3337	C3	3714	C5	5370	C5	7730	C5	9236	G3	9639	C1
3160	E1	3338	C4	3720	C5	5375	C3	7732	C5	9238	G3	9641	C1
3161	F1	3339	C4	3722	B5	5454	E5	9084	B4	9240	G3	9642	C1
3162	E1	3342	C3	3724	B5	5455	E5	9086	B4	9241	G3	9650	B2
3163	G1	3344	C4	3726	C5	5456	E5	9087	B4	9242	G3	9651	C2
3164	G1	3345	G5	3728	C5	5460	F5	9088	B5	9246	F3	9652	C2
3165	G1	3346	D3	3730	C5	6107	H1	9089	G2	9248	G3	9653	C2
3166	E2	3348	E4	3732	C5	6108	H1	9090	C5	9249	F3	9654	C2
3167	F1	3349	D4	3733	C5	6112	C1	9091	A5	9250	H5	9655	C2
3168	F1	3350	C4	3734	C5	6117	B3	9092	A5	9252	G4	9656	C2
3169	C3	3351	C4	3750	B2	6120	F1	9093	E1	9254	G4	9657	C2
3170	F3	3353	C4	3751	B3	6121	F1	9095	G1	9255	F4	9658	C2
3171	E5	3354	D4	3996	A1	6130	B3	9096	G1	9256	G4	9659	C2
3172	F1	3360	D5	3997	A1	6135	B4	9097	G1	9257	F4	9660	C2
3173	G4	3361	D5	3998	A1	6136	B4	9098	G1	9258	G4	9670	D2
3174	F4	3365	D3	3999	A1	6137	B4	9100	B2	9259	G4	9671	D2
3175	B1	3369	C4	4066	G1	6163	G1	9101	B2	9260	E3	9672	C2
3176	B1	3370	D4	4103	A2	6165	B1	9102	B2	9261	E2	9673	D2
3177	B1	3371	C4	4105	D1	6166	B1	9104	B2	9262	E2	9674	D2
3178	B1	3372	D4	4106	D1	6168	F1	9105	B2	9263	E2	9675	D2
3179	F4	3375	C3	4107	D2	6170	E3	9106	C3	9264	H4	9676	D2
3180	F3	3376	D3	4108	C1	6172	E5	9107	B2	9265	E3	9677	C2
3181	E3	3377	D4	4109	D2	6173	E5	9108	B3	9266	F3	9680	D2
3182	F3	3380	D4	4110	D2	6178	H4	9109	H2	9267	F2	9681	D2
3183	E3	3381	D5	4111	C2	6179	H3	9110	B2	9268	F3	9682	D2
3184	F3	3382	G5	4112	E3	6205	G3	9111	B2	9269	F3	9683	D2
3185	G3	3383	D5	4114	G3	6206	G3	9112	B2	9270	F3	9684	E2
3186	G3	3387	D5	4115	G3	6207	G3	9113	B2	9271	F3	9685	E2
3187	H3	3388	D5	4116	G1	6256	C2	9114	B2	9272	F3	9690	E3
3188	F4	3389	D5	4117	G1	6257	C1	9115	B1	9273	F3	9691	E3
3189	B1	3390	D5	4118	G4	6280	F2	9116	B2	9274	G3	9692	E3
3190	B1	3391	G5	4120	H2	6281	F2	9117	B2	9277	G3	9693	E3
3191	B1	3392	G5	4125	B3	6331	E4	9119	B3	9278	G2	9694	E3
3192	B1	3393	G4	4129	A5	6342	C4	9120	G2	9279	G2	9695	E3
3193	H4	3394	G4	4130	E2	6343	C4	9121	D1	9280	G2	9696	D3
3194	H4	3395	H5	4135	B3	6345	E4	9122	F2	9281	F3	9697	D3
3196	E2	3396	G5	4148	E1	6370	D5	9123	D3	9282	E2	9698	D3
3197	E2	3397	G5	4161	E2	6386	D5	9125	C2	9290	G3	9705	C3
3200	B1	3398	G5	4162	F1	6387	D5	9126	C1	9301	D5	9706	C3
3201	B1	3399	G5	4163	F2	6450	E5	9127	B3	9302	D5	9707	C3
3202	B1	3400	F4	4164	G4	6465	F5	9128	B2	9310	C5	9710	C3
3204	B2	3410	E4	4165	F3	6470	F5	9130	B3	9316	D5	9711	C4
3205	H3	3414	G5	4166	F1	6471	F5	9131	G2	9317	C1	9712	C3
3206	H3	3425	E5	4167	B3	6478	G5	9132	G2	9318	E4	9714	C3
3207	H4	3426	E5	4170	C1	6479	F5	9133	C4	9320	D3	9716	D3
3208	H3	3439	F4	4171	B1	6480	E4	9134	B3	9321	E4	9717	D3
3209	H3	3441	F4	4175	B1	6481	F5	9137	D3	9324	D5	9720	D3
3210	H3	3443	F4	4176	F4	6610	D3	9138	D3	9325	C3	9721	D3
3211	G2	3450	E5	4184	E3	6611	D3	9140	B4	9326	C2	9723	E3
3212	B2	3451	F5	4200	C5	6660	E2	9141	B4	9330	D5	9724	E3
3213	B4	3453	E5	4201	C5	6661	E2	9142	B1	9331	D5	9725	E3
3215	H3	3454	E5	4203	A3	6662	E2	9143	C1	9335	D5	9726	E3
3216	H3	3455	E5	4205	G4	6663	E2	9145	B4	9336	A5	9727	E3
3217	G3	3456	E5	4209	H4	6664	B5	9146	B4	9350	E4	9730	B5
3218	H3	3465	F4	4210	H5	6665	D1	9147	B4	9361	F3	9732	D3
3219	F2	3466	E4	4220	H4	7107	H1	9148	F2	9365	C4	9735	B5
3220	G3	3471	G5	4231	H2	7108	G1	9150	C3	9366	D5	9737	C5
3222	G2	3472	F5	4232	H2	7110	B3	9151	B1	9371	D4	9739	C5
3224	H4	3473	F5	4234	H2	7115	B3	9152	B1	9372	E4	9741	C5
3225	E3	3474	F5	4235	H2	7119	C4	9153	B1	9375	C3	9742	B1
3232	F2	3475	F5	4236	H2	7120	F1	9154	C1	9376	D5	9743	C1
3233	F2	3476	F5	4237	H2	7121	F1	9155	B1	9379	D4	9750	B3
3234	H2	3477	G5	4241	F2	7130	A5	9156	A2	9380	E4		
3235	H2	3478	G5	4246	F3	7137	B4	9157	A2	9381	F4		
3237	G2	3479	F5	4255	G4	7150	B3	9158	D3	9382	F4		

FL2 LED/Control

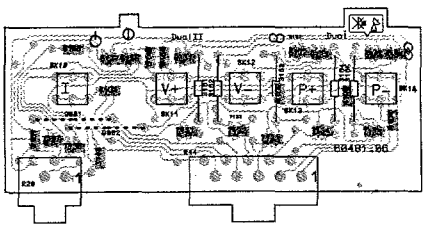

FL4 LED/Control

3148 A 1	3163 C 1	6131 C 1	6136 D 1	7134 B 1	9181 A 1	SK13 B 1	
3149 A 1	3164 B 1	6132 C 1	6137 D 1	7135 B 1	R28 D 1	SK14 B 1	
3158 A 1	3165 B 1	6133 C 1	7131 C 1	7136 C 1	R44 A 1		
3161 C 1	3166 C 1	6134 B 1	7132 C 1	7137 D 1	SK11 C 1		
3162 B 1	3167 C 1	6135 B 1	7133 B 1	9182 A 1	SK12 D 1		

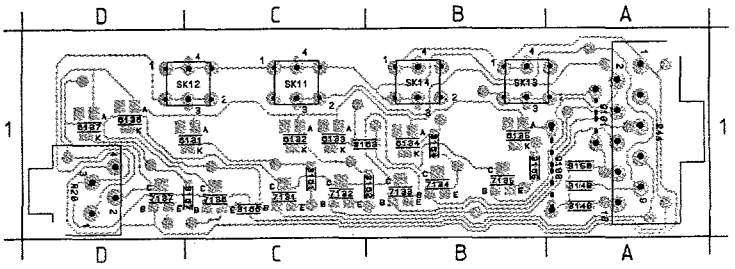

FL2 Front

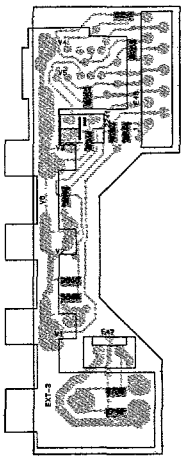

FL2 IR

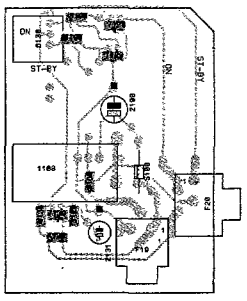

FL4 Front

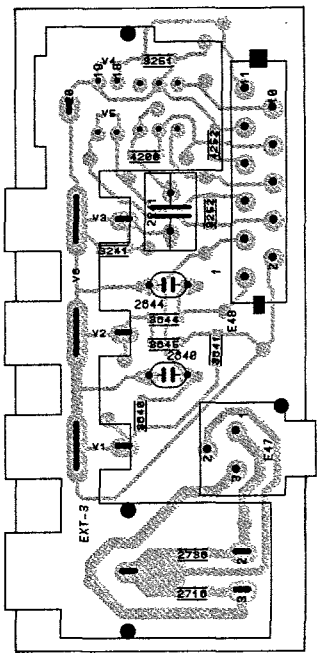

FL4 IR LED panel

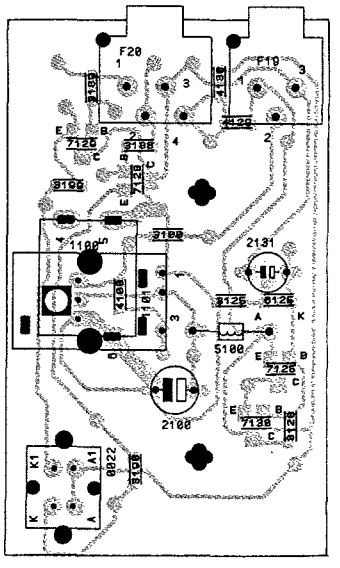

Source selection / Quellenwahl /

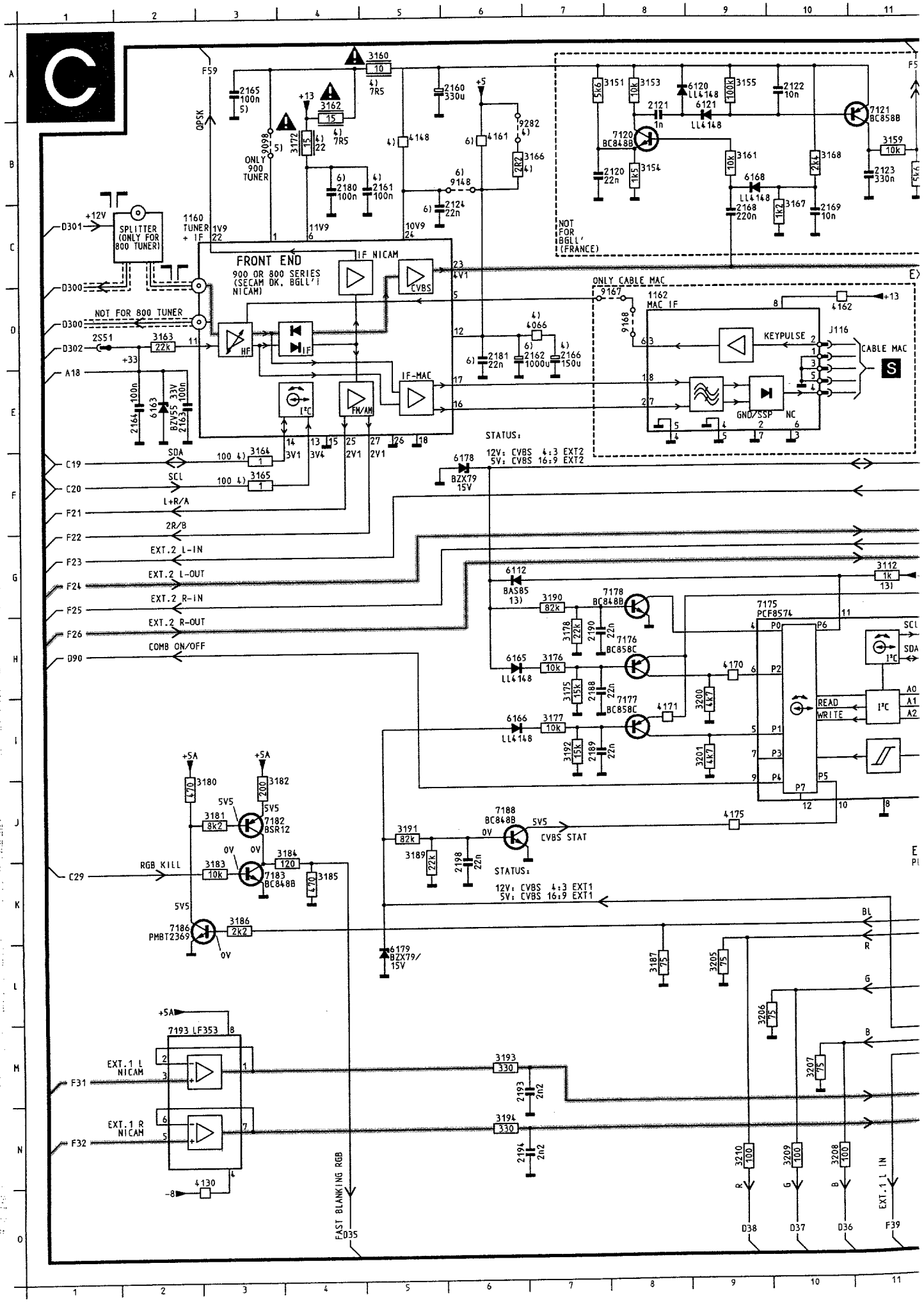

Sélection de source

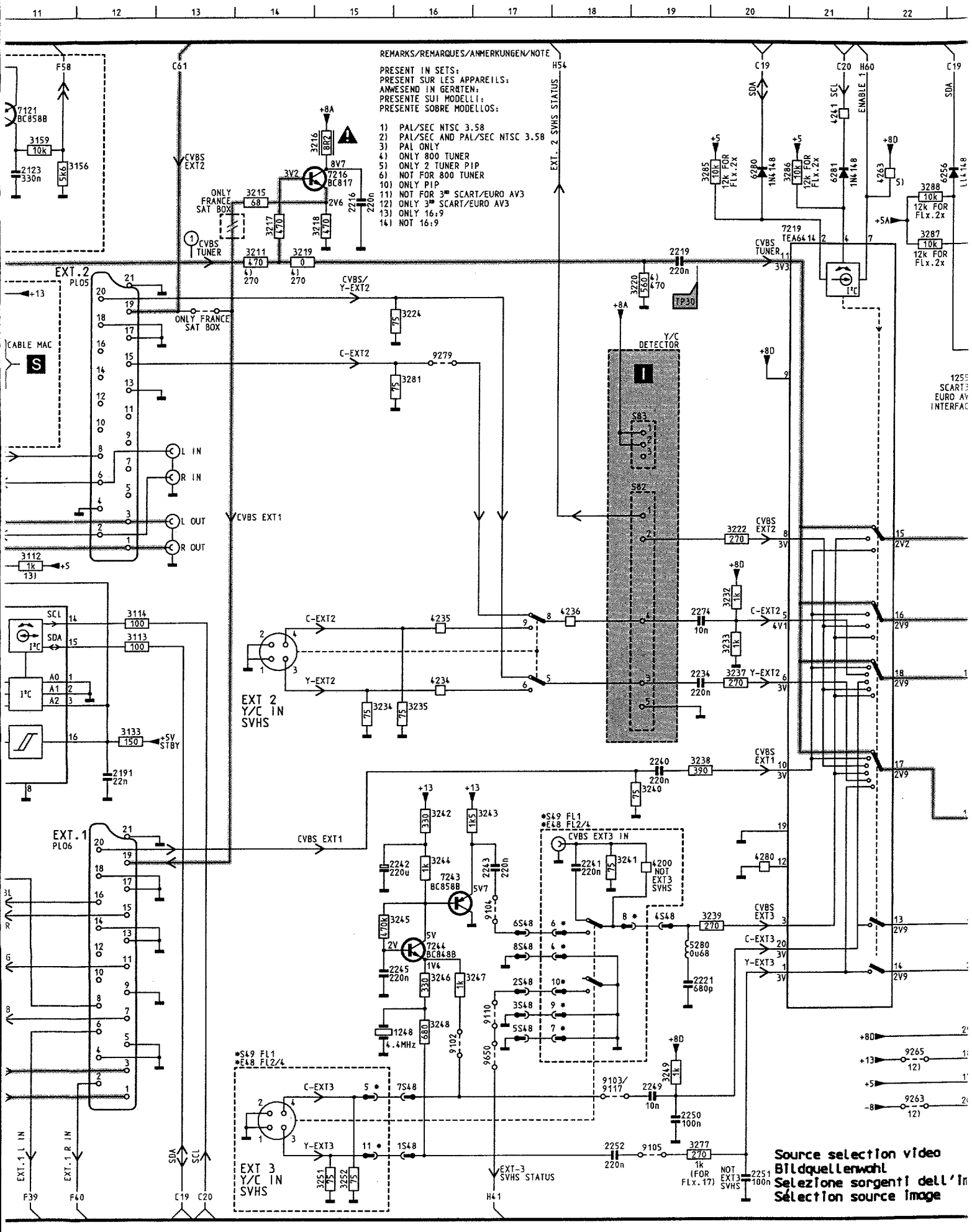

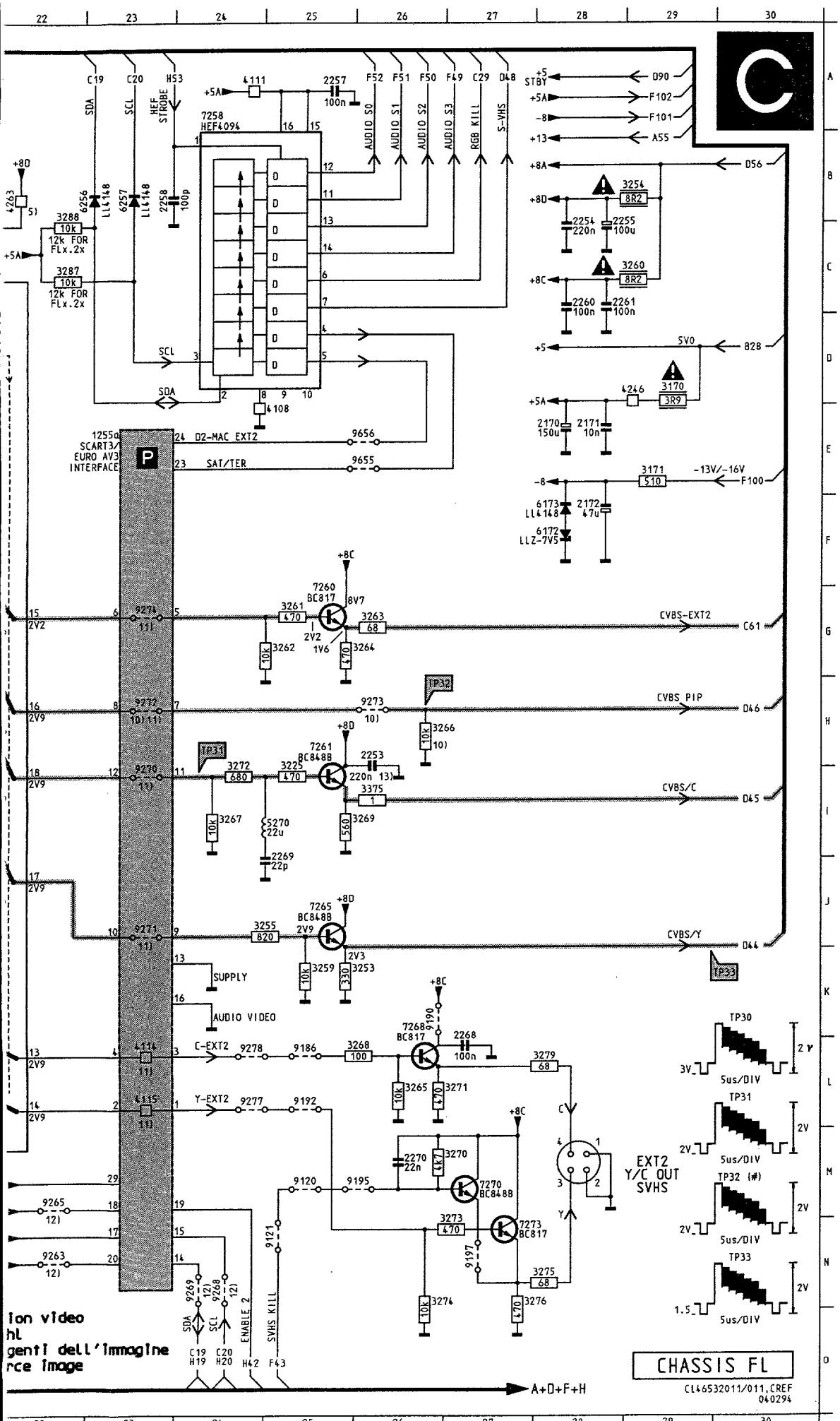

1160	C 2	3237	I20	9192	L25
1162	D 8	3238	J19	9195	M26
1248	M16	3239	L20	9197	N27
1255	E23	3240	J19	9263	N22
2120	B 7	3241	K18	9265	M22
2121	A 8	3242	J16	9268	N24
2122	A10	3243	J17	9269	N24
2123	B11	3244	K16	9270	I23
2124	C 6	3245	L16	9271	J23
2160	A 6	3246	L16	9272	H23
2161	B 5	3247	L16	9273	H26
2162	D 7	3248	M16	9274	G23
2163	E 2	3249	N19	9277	L24
2164	E 2	3251	O15	9278	L24
2165	A 3	3252	O15	9279	E16
2166	D 7	3253	K25	9282	B 6
2168	C 9	3254	B29	9650	M17
2169	C10	3255	J25	9655	E26
2170	E28	3259	K25	9656	E26
2171	E28	3260	C29		
2172	F28	3261	G25		
2180	B 4	3262	G25		
2181	D 6	3263	G26		
2188	I 7	3264	G25		
2189	I 7	3265	L26		
2190	H 7	3266	H26		
2191	J12	3267	I24		
2193	M 6	3268	L26		
2194	N 6	3269	I25		
2198	K 6	3270	M27		
2216	C15	3271	L27		
2219	C19	3272	I24		
2221	L19	3273	N27		
2234	I19	3274	N26		
2240	J19	3275	N28		
2241	K18	3276	N27		
2242	K15	3277	O19		
2243	K17	3279	L28		
2245	L15	3281	E16		
2249	N19	3285	B19		
2250	N19	3286	B21		
2251	O20	3287	C22		
2252	O18	3288	B22		
2253	H26	3375	I26		
2254	C28	4066	D 7		
2255	C28	4108	E25		
2257	A25	4111	A24		
2258	B23	4114	L23		
2260	C28	4115	L23		
2261	C28	4130	N 3		
2268	L27	4148	B 5		
2269	J25	4161	B 6		
2270	M26	4162	D10		
2274	H19	4170	H 9		
3112	G11	4171	I 8		
3113	H12	4175	J 9		
3114	H12	4200	K19		
3133	I12	4234	I16		
3151	A 7	4235	H16		
3153	A 8	4236	H18		
3154	B 8	4241	B21		
3155	A 9	4246	D29		
3156	B11	4263	B22		
3159	B11	4280	K20		
3160	A 5	5270	I25		
3161	B 9	5280	L19		
3162	A 4	6112	G 6		
3163	D 2	6120	A 9		
3164	F 3	6121	A 9		
3165	F 3	6163	E 2		
3166	B 7	6165	H 6		
3167	C10	6166	I 6		
3168	B10	6168	B 9		
3170	D29	6172	F28		
3171	E29	6173	F28		
3172	B 4	6178	F 6		
3175	I 7	6179	L 5		
3176	H 7	6256	B23		
3177	I 7	6257	B23		
3178	H 7	6280	B20		
3180	I 2	6281	B21		
3181	J 3	7120	B 8		
3182	I 3	7121	B11		
3183	K 3	7175	H 9		
3184	J 4	7176	H 8		
3185	K 4	7177	I 8		
3186	K 3	7178	G 8		
3187	L 8	7182	J 3		
3189	J 5	7183	K 3		
3190	G 7	7186	K 2		
3191	J 5	7188	J 6		
3192	I 7	7193	M 2		
3193	M 6	7216	B15		
3194	N 6	7219	C20		
3200	I 9	7243	K16		
3201	I 9	7244	L16		
3205	L 9	7258	A24		
3206	L 9	7260	G25		
3207	M10	7261	H25		
3208	N10	7265	J25		
3209	N10	7268	K26		
3210	N 9	7270	M27		
3211	C14	7273	N27		
3215	C14	9098	B 3		
3216	B15	9102	M16		
3217	C14	9103	N18		
3218	C15	9104	K17		
3219	C14	9105	O19		
3220	D19	9110	M17		
3222	G20	9120	M25		
3224	D16	9121	N25		
3225	I25	9148	B 6		
3232	H20	9167	D 8		
3233	H20	9168	D 8		
3234	I15	9186	L25		
3235	I16	9190	K26		

Synchronization / Synchronisierung / Synchronisation

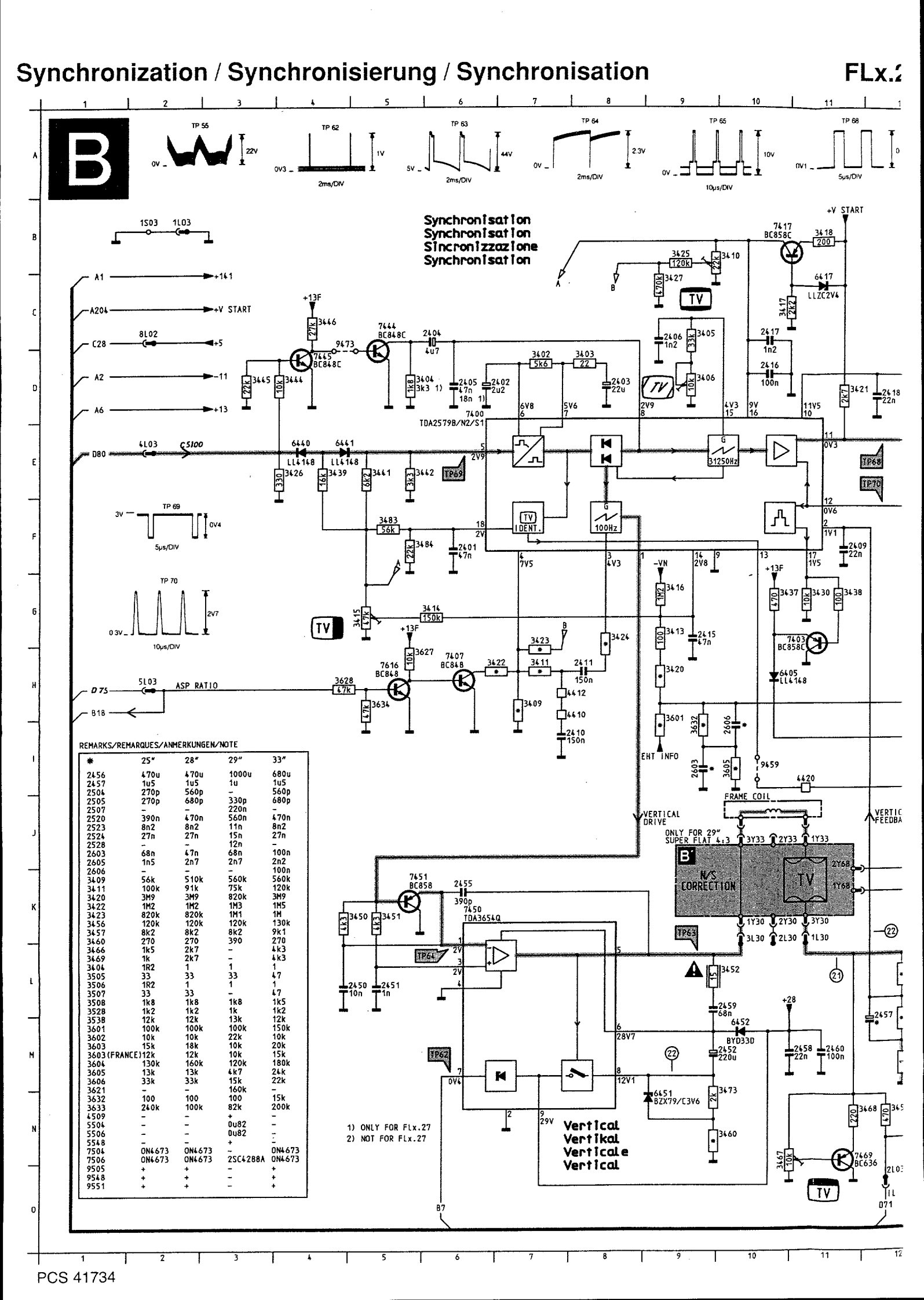

FLx.26/.27 (4:3)

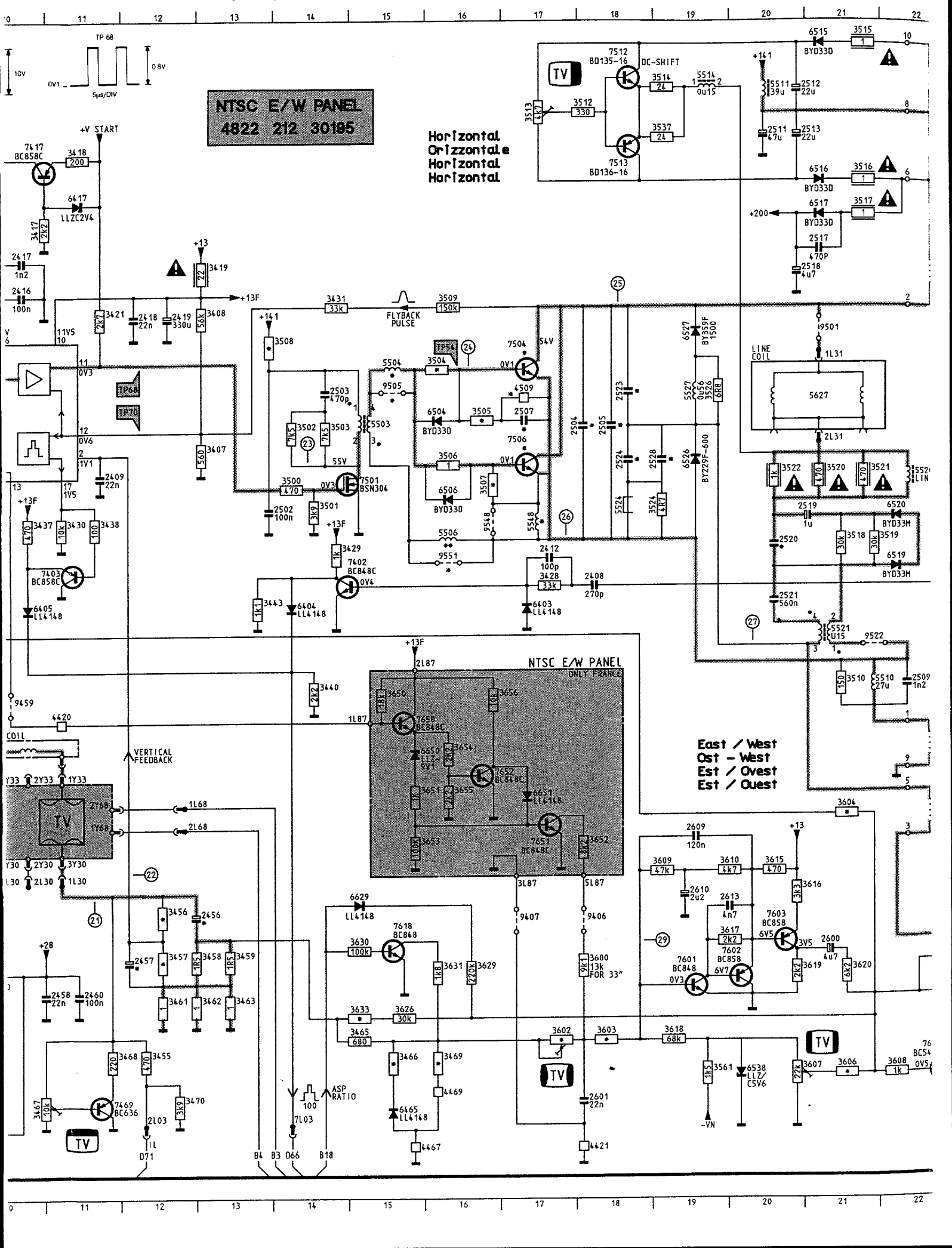
NTSC E/W PANEL
4822 212 30195
Horizontal
Orizzontale
Horizontal
Horizontal
NTSC E/W PANEL
ONLY FRANCE
East / West
Ost - West
Est / Ovest
Est / Ouest
VERTICAL FEEDBACK
FLYBACK PULSE
ASP RATIO
DC-SHIFT
LINE COIL
+V START
TP 68
10V
0V1
0.8V
5µs/DIV

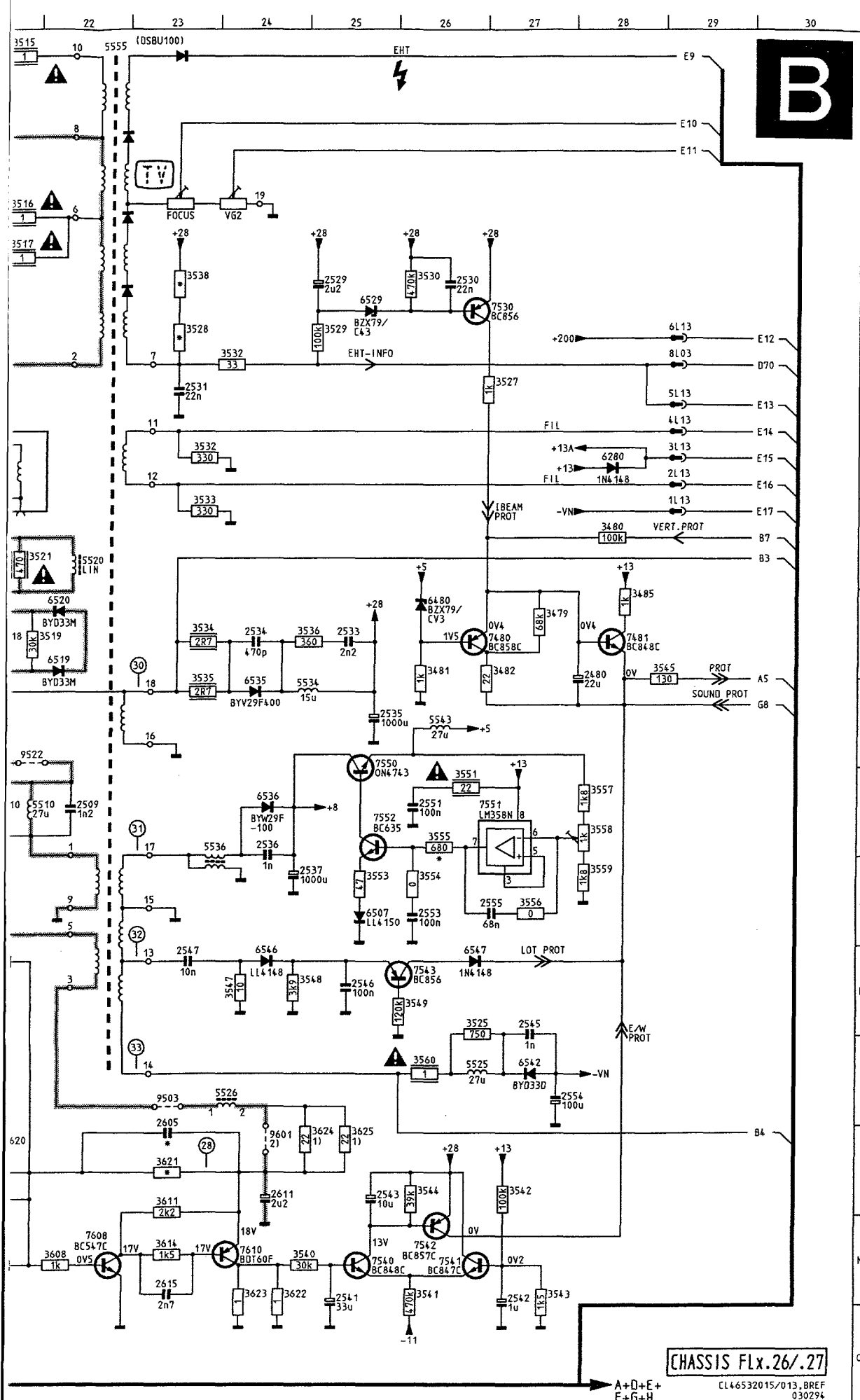

	2401	F 6	3458	L13	4410	H 7
	2402	D 6	3459	L13	4412	H 7
	2403	D 8	3460	N10	4420	I 11
	2404	C 6	3461	M12	4421	O18
A	2405	D 6	3462	M13	4467	O15
	2406	C 9	3463	M13	4469	N16
	2408	H18	3465	N15	4509	E17
	2409	F11	3466	N15	5503	F15
	2410	I 7	3467	N10	5504	E15
	2411	H 8	3468	N11	5506	G16
	2412	G17	3469	N16	5510	I21
	2415	G 9	3470	N12	5511	A20
B	2416	D10	3473	M10	5514	A19
	2417	C10	3479	G27	5520	F22
	2418	D12	3480	F28	5521	H21
	2419	D12	3481	G26	5524	G18
	2450	L 5	3482	G27	5525	L26
	2451	L 5	3483	F 5	5526	L24
	2452	M10	3484	F 5	5527	E19
	2455	K 6	3485	F28	5534	H25
C	2456	L13	3500	F14	5536	I23
	2457	M12	3501	G14	5543	H26
	2458	M11	3502	F14	5548	G17
	2459	L10	3503	F14	5555	A22
	2460	M11	3504	E16	5627	E21
	2480	G28	3505	E16	6280	E28
	2502	G14	3506	F16	6403	H17
D	2503	E14	3507	F16	6404	H14
	2504	F18	3508	D14	6405	H10
	2505	F18	3509	D16	6417	C11
	2507	E17	3510	I21	6440	E 4
	2509	I22	3512	A18	6441	E 4
	2511	B20	3513	B17	6451	N 9
	2512	A20	3514	A19	6452	M10
	2513	B20	3515	A21	6465	O15
E	2517	C21	3516	B21	6480	G26
	2518	D20	3517	C21	6504	E16
	2519	G21	3518	G21	6506	F16
	2520	G20	3519	G21	6507	J25
	2521	H20	3520	F21	6515	A21
	2523	E18	3521	F21	6516	B21
	2524	F18	3522	F20	6517	C21
F	2528	F19	3524	G19	6519	G22
	2529	C25	3525	K26	6520	G22
	2530	C26	3526	E19	6526	F19
	2531	D23	3527	D27	6527	D19
	2533	G25	3528	D23	6529	C25
	2534	G24	3529	D25	6535	H24
	2535	H25	3530	C26	6536	I24
	2536	I24	3532	E23	6538	N20
G	2537	J24	3532	D24	6542	L27
	2541	N25	3533	F23	6546	K24
	2542	N27	3534	G23	6547	K26
	2543	M25	3535	H23	6629	L15
	2545	K27	3536	G25	6650	J15
	2546	K25	3537	B19	6651	J17
	2547	K23	3538	C23	7400	D 6
H	2551	I26	3540	N25	7402	G14
	2553	J26	3541	N26	7403	G11
	2554	L27	3542	M27	7407	H 6
	2555	J27	3543	N27	7417	B10
	2600	L21	3544	M26	7444	C 5
	2601	N18	3545	G29	7445	D 4
	2603	I 9	3547	K24	7450	K 6
	2605	M23	3548	K24	7451	K 5
I	2606	I10	3549	K26	7469	N11
	2609	K19	3551	I26	7480	G27
	2610	L19	3553	J25	7481	G28
	2611	M24	3554	J26	7501	F15
	2613	L20	3555	I26	7504	E17
	2615	N23	3556	J27	7506	F17
	3402	D 7	3557	I28	7512	A18
	3403	D 8	3558	I28	7513	B18
J	3404	D 5	3559	J28	7530	C27
	3405	C 9	3560	L26	7540	N25
	3406	D 9	3561	N19	7541	N26
	3407	F13	3600	L18	7542	N26
	3408	D13	3601	H 9	7543	K26
	3409	H 7	3602	N17	7550	I25
	3410	B10	3603	N18	7551	I26
K	3411	H 7	3604	K21	7552	I25
	3413	G 9	3605	I10	7601	M19
	3414	G 6	3606	N21	7602	M20
	3415	G 5	3607	N20	7603	L20
	3416	G 9	3608	N22	7608	N22
	3417	C10	3609	K19	7610	N24
	3418	B11	3610	K20	7616	H 5
L	3419	C13	3611	M23	7618	L15
	3420	H 9	3614	N23	7650	J15
	3421	D11	3615	K20	7651	K17
	3422	H 7	3616	L20	7652	J16
	3423	G 7	3617	L20	9406	L18
	3424	G 8	3618	N19	9407	L17
	3425	B 9	3619	M20	9459	I10
	3426	E 4	3620	N21	9473	C 4
M	3427	C 9	3621	M23	9501	D21
	3428	H17	3622	N24	9503	L23
	3429	G14	3623	N24	9505	E15
	3430	G11	3624	M25	9522	H21
	3431	D14	3625	M25	9548	G16
	3437	G10	3626	M15	9551	G16
	3438	G11	3627	H 5	9601	M24
	3439	E 4	3628	H 4		
N	3440	I14	3629	M16		
	3441	E 5	3630	L15		
	3442	E 5	3631	M16		
	3443	H13	3632	I 9		
	3444	D 4	3633	M15		
	3445	D 3	3634	H 5		
	3446	C 4	3650	I15		
	3450	K 5	3651	J15		
O	3451	K 5	3652	K18		
	3452	L10	3653	K15		
	3455	N12	3654	J16		
	3456	L12	3655	J16		
	3457	L12	3656	I16		

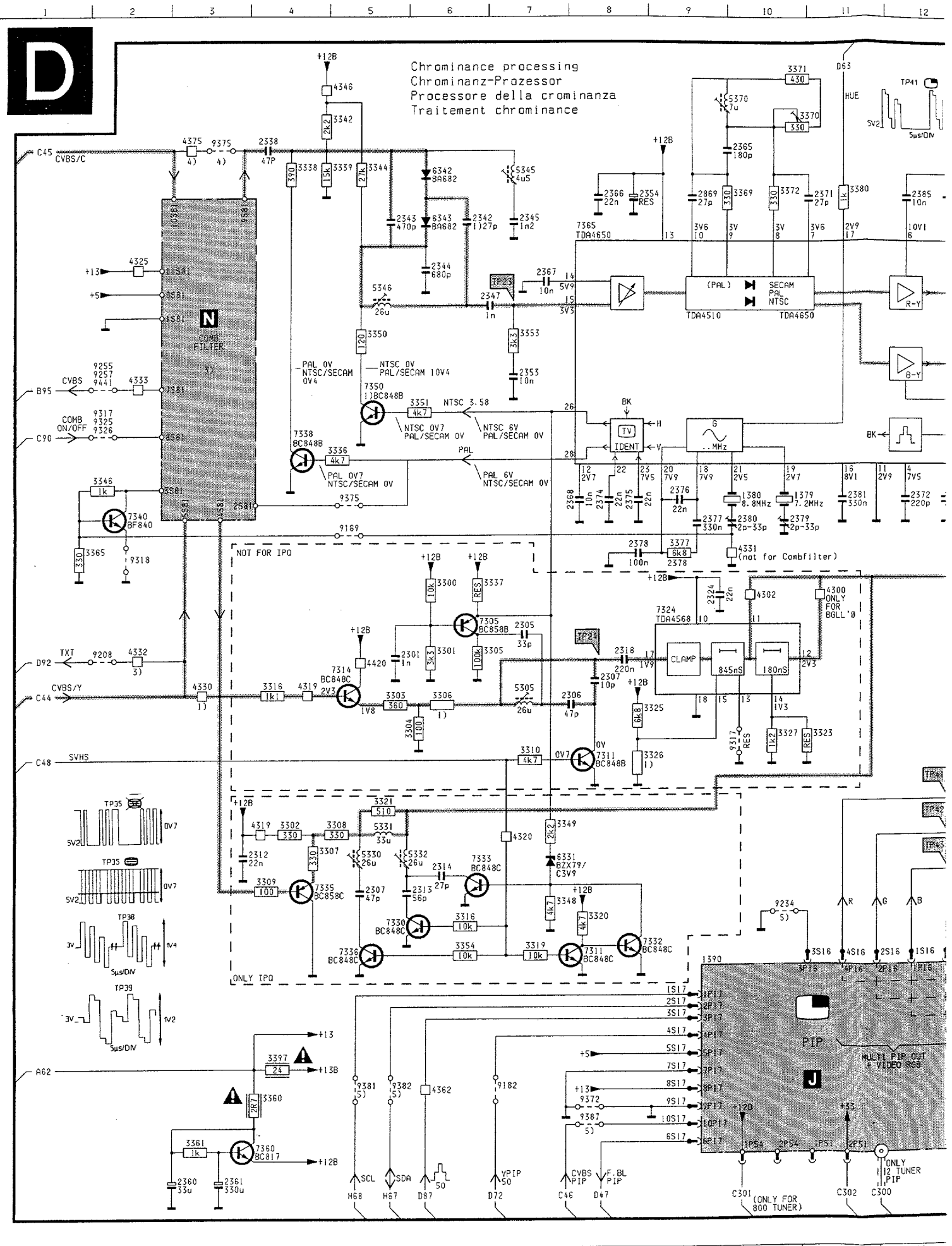
D
Chrominance processing
Chrominanz-Prozessor
Processore della crominanza
Traitement chrominance
C45 CVBS/C
C90
C44 CVBS/Y
C48 SVHS
B95
D92 TXT
A62
N
COMB FILTER
J
PIP
MULTI PIP OUT + VIDEO RGB
NOT FOR IPO
ONLY IPO
TDA4650
TDA4510
TDA4568
7340 BF840
7350 BC848B
7338 BC848B
7314 BC848C
7335 BC858C
7330 BC848C
7336 BC848C
7333 BC848C
7332 BC848C
7311 BC848B
7360 BC817
6342 BA682
6343 BA682
6331 BZX79/C3V9
PAL 0V NTSC/SECAM 0V4
NTSC 0V PAL/SECAM 10V4
NTSC 3.58
PAL
IDENT
CLAMP
845nS
180nS
SCL
SDA
YPIP
CVBS PIP
F.BL PIP
ONLY 12 TUNER PIP
C301 (ONLY FOR 800 TUNER)
C302
C300

Traitement vidéo

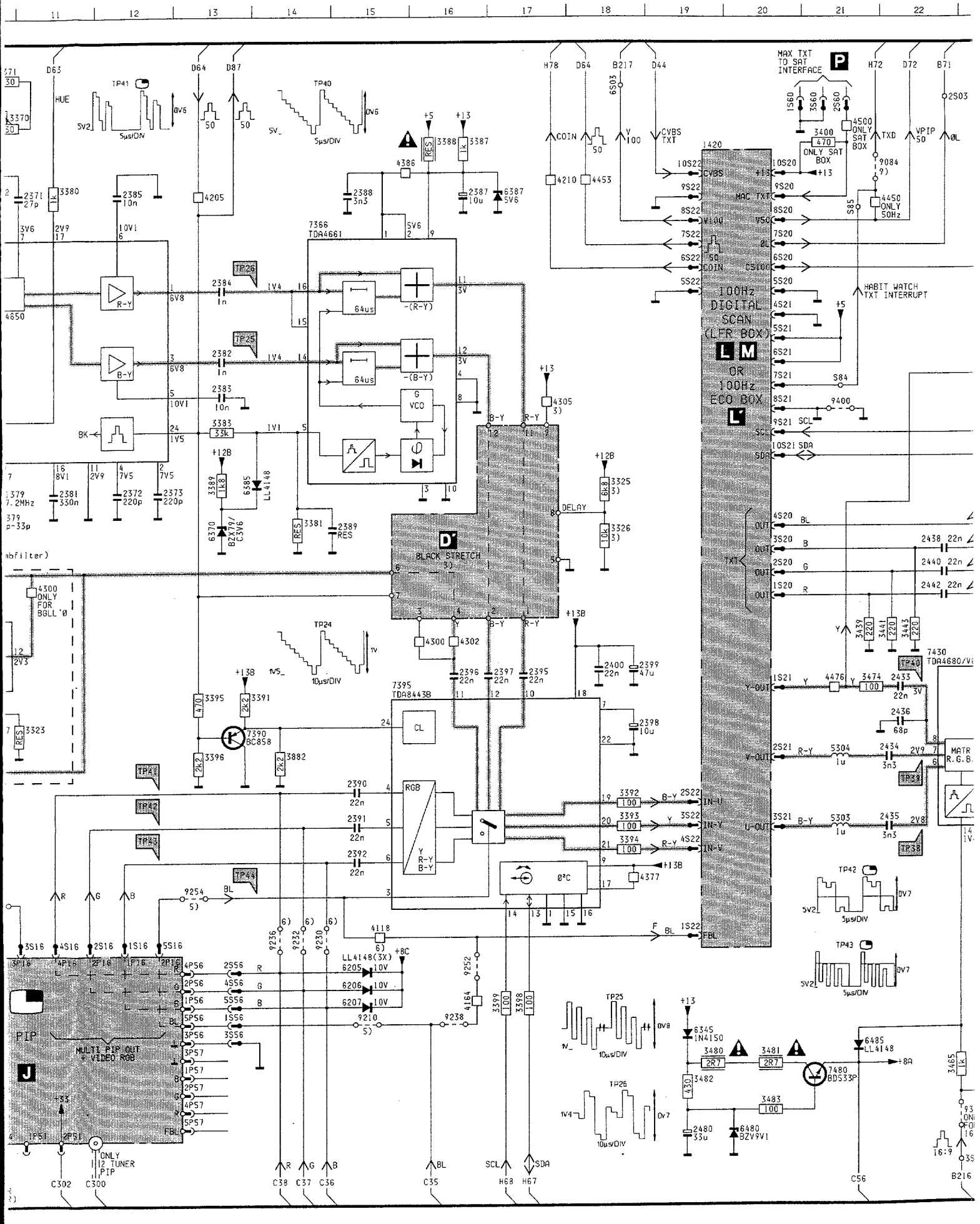

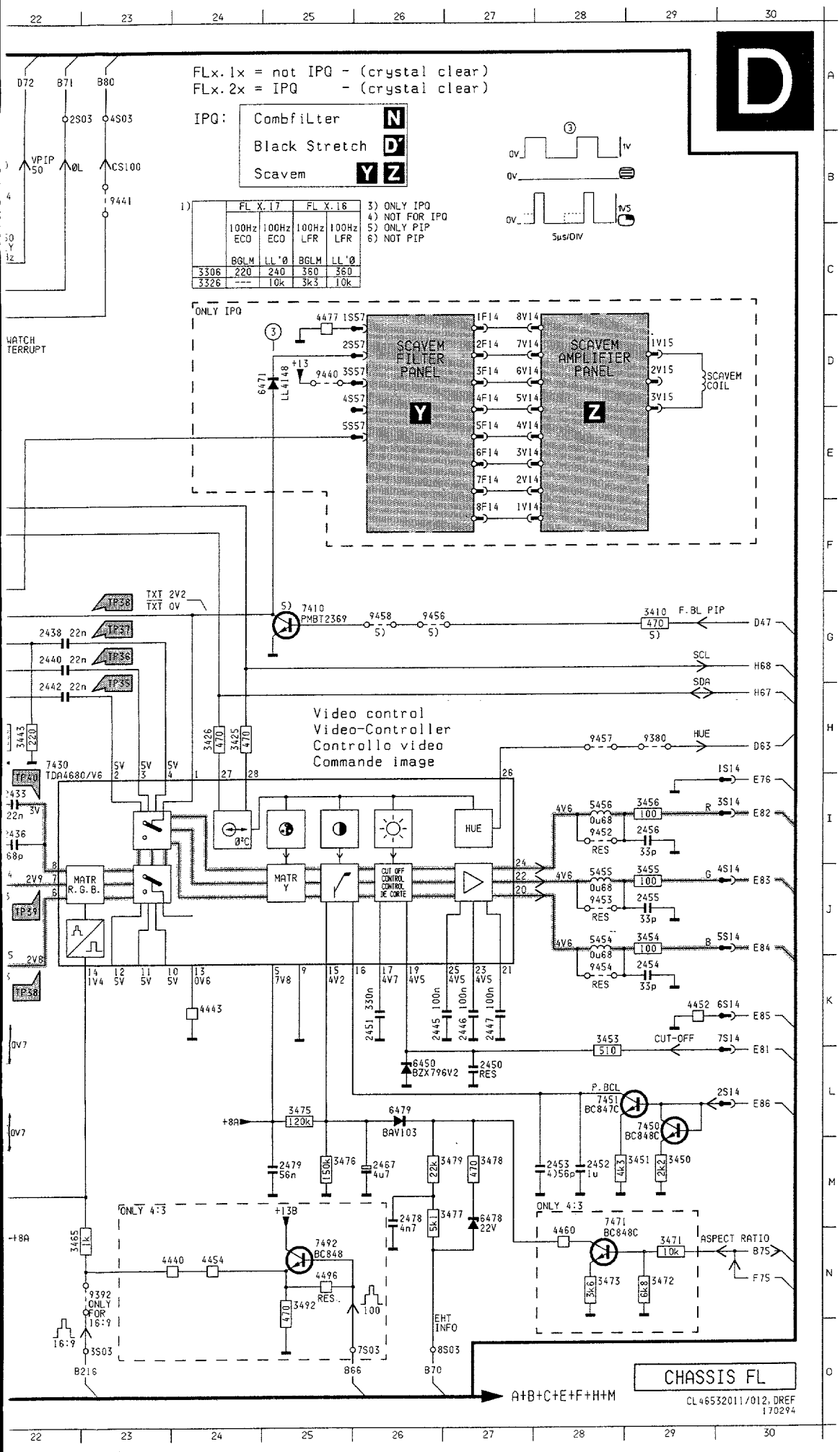

	1379	F10	3370	B10	7332	L 8
	1380	F10	3371	A10	7333	K 6
	1390	L 9	3372	B10	7335	K 4
	1420	B19	3377	G 9	7336	L 5
A	2301	H 5	3380	B11	7338	F 4
	2305	H 7	3381	G14	7340	G 2
	2306	I 8	3383	E13	7350	E 5
	2307	I 8	3387	B16	7360	N 4
	2307	K 5	3388	B16	7365	C 8
	2312	K 3	3389	F13	7366	C14
	2313	K 6	3391	I13	7390	I13
	2314	K 6	3392	J18	7395	I15
B	2318	H 8	3393	J18	7410	G25
	2324	H 9	3394	K18	7430	H22
	2338	B 4	3395	I13	7450	L29
	2342	C 6	3396	J13	7451	L28
	2343	C 5	3397	M 4	7471	M28
	2344	C 6	3398	M17	7480	N21
	2345	C 7	3399	M17	7492	N25
	2347	D 7	3400	B21	9084	B21
C	2353	E 7	3410	G29	9189	G 5
	2354	C 8	3425	H24	9182	N 7
	2360	O 3	3426	H24	9208	H 2
	2361	O 3	3439	H21	9210	M15
	2365	B10	3441	H22	9230	L14
	2366	C 8	3443	H22	9232	L14
	2367	D 7	3450	M29	9234	K10
D	2368	F 8	3451	M29	9236	L14
	2371	C11	3453	K28	9238	M16
	2372	F12	3454	J29	9252	L16
	2373	F12	3455	J29	9254	K13
	2375	F 8	3456	I29	9255	E 2
	2376	F 9	3465	N22	9317	E 2
	2377	G 9	3471	N29	9317	I10
	2378	G 8	3472	N29	9318	G 2
E	2378	G 9	3473	N28	9372	N 8
	2379	G10	3474	I21	9375	B 3
	2380	G10	3475	L25	9375	F 5
	2381	F11	3476	M25	9380	H29
	2382	E13	3477	M26	9381	N 5
	2383	E13	3478	M27	9382	N 5
	2384	D13	3479	M26	9387	N 8
F	2385	C12	3480	M19	9392	N23
	2387	C16	3481	M20	9400	E21
	2388	C15	3482	N19	9440	D25
	2389	G15	3483	N20	9441	B23
	2390	J15	3492	N25	9452	I28
	2391	J15	3882	J14	9453	J28
	2392	K15	4118	L15	9454	K28
	2395	I17	4164	M16	9456	G26
G	2396	I16	4205	C13	9457	H28
	2397	I17	4210	B17	9458	G26
	2398	I18	4300	H11		
	2399	I18	4300	H16		
	2400	I18	4302	H10		
	2433	I22	4302	H16		
	2434	J22	4305	E17		
	2435	J22	4319	I 4		
H	2436	I22	4319	J 4		
	2438	G22	4320	K 7		
	2440	G22	4325	C 2		
	2442	H22	4330	I 3		
	2445	K26	4331	G10		
	2446	K27	4332	H 2		
	2447	K27	4333	E 2		
I	2450	L27	4346	A 5		
	2451	K26	4362	N 6		
	2452	M28	4375	B 3		
	2453	M28	4377	K18		
	2454	K29	4386	B15		
	2455	J29	4420	H 5		
	2456	I29	4440	N24		
	2467	M26	4443	K24		
J	2478	M26	4450	C22		
	2479	M25	4452	K29		
	2480	N19	4453	B18		
	2869	C 9	4454	N24		
	3300	G 6	4460	N28		
	3301	H 6	4476	I21		
	3302	J 4	4477	D25		
K	3303	I 5	4496	N25		
	3304	I 6	4500	B21		
	3305	H 6	5303	K21		
	3306	I 6	5304	J21		
	3307	K 4	5305	I 7		
	3308	J 5	5330	K 5		
	3309	K 4	5331	J 5		
L	3310	I 7	5332	K 6		
	3316	I 4	5345	B 7		
	3316	L 6	5346	D 5		
	3319	L 7	5370	A10		
	3320	K 8	5454	J28		
	3321	J 5	5455	J28		
	3323	I11	5456	I28		
	3325	F18	6205	L15		
M	3325	I 8	6206	M15		
	3326	G18	6207	M15		
	3326	I 8	6331	K 7		
	3327	I10	6342	B 6		
	3336	F 5	6343	C 6		
	3337	G 6	6345	M19		
	3338	B 4	6370	G13		
	3339	B 5	6385	F13		
N	3342	B 5	6387	C17		
	3344	B 5	6450	L26		
	3346	F 2	6471	D25		
	3348	K 7	6478	M27		
	3349	J 7	6479	L26		
	3350	D 5	6480	N20		
	3351	E 6	6485	M21		
	3353	D 7	7305	H 6		
O	3354	L 6	7311	J 8		
	3360	N 4	7311	L 8		
	3361	N 3	7314	H 5		
	3365	G 1	7324	H 9		
	3369	B10	7330	L 5		

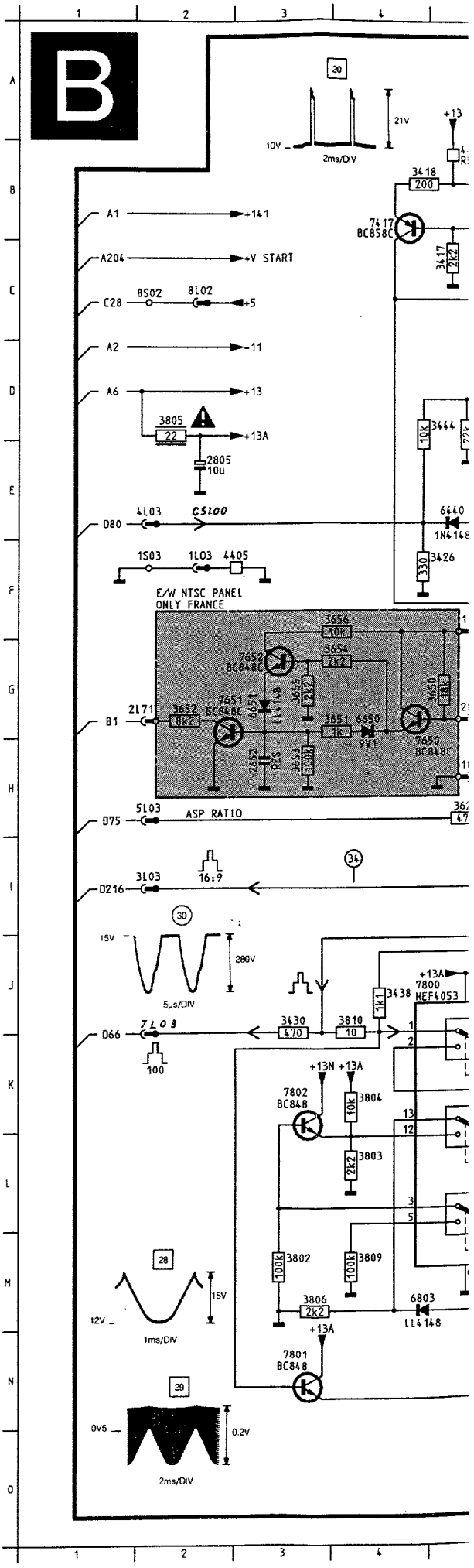
B
20
10V
21V
2ms/DIV
+13
3418
200
7417
BC858C
3417
2K2
A1
+141
A204
+V START
C28
8S02
8L02
+5
A2
-11
A6
+13
3805
22
+13A
2805
10u
10k
3444
D80
4L03
CS100
6440
1N4148
3426
330
1S03
1L03
4405
E/W NTSC PANEL
ONLY FRANCE
3656
10K
7652
BC848C
3654
2K2
3655
2K2
3650
10K
2L71
B1
3652
8K2
7651
BC848C
6651
LL4148
3651
1K
6650
SV1
7650
BC848C
2652
RES
3653
100K
5L03
ASP RATIO
D75
3L03
16:9
34
D216
30
15V
280V
5µs/DIV
1K1
3438
+13A
7800
HEF4053
7L03
D66
3430
470
3810
10
100
+13N +13A
7802
BC848
10k
3804
2k2
3803
28
12V
15V
1ms/DIV
100k
3802
100k
3809
3806
2K2
6803
LL4148
+13A
7801
BC848
29
0V5
0.2V
2ms/DIV

Synchronization / Synchronisierung / Synchronisation

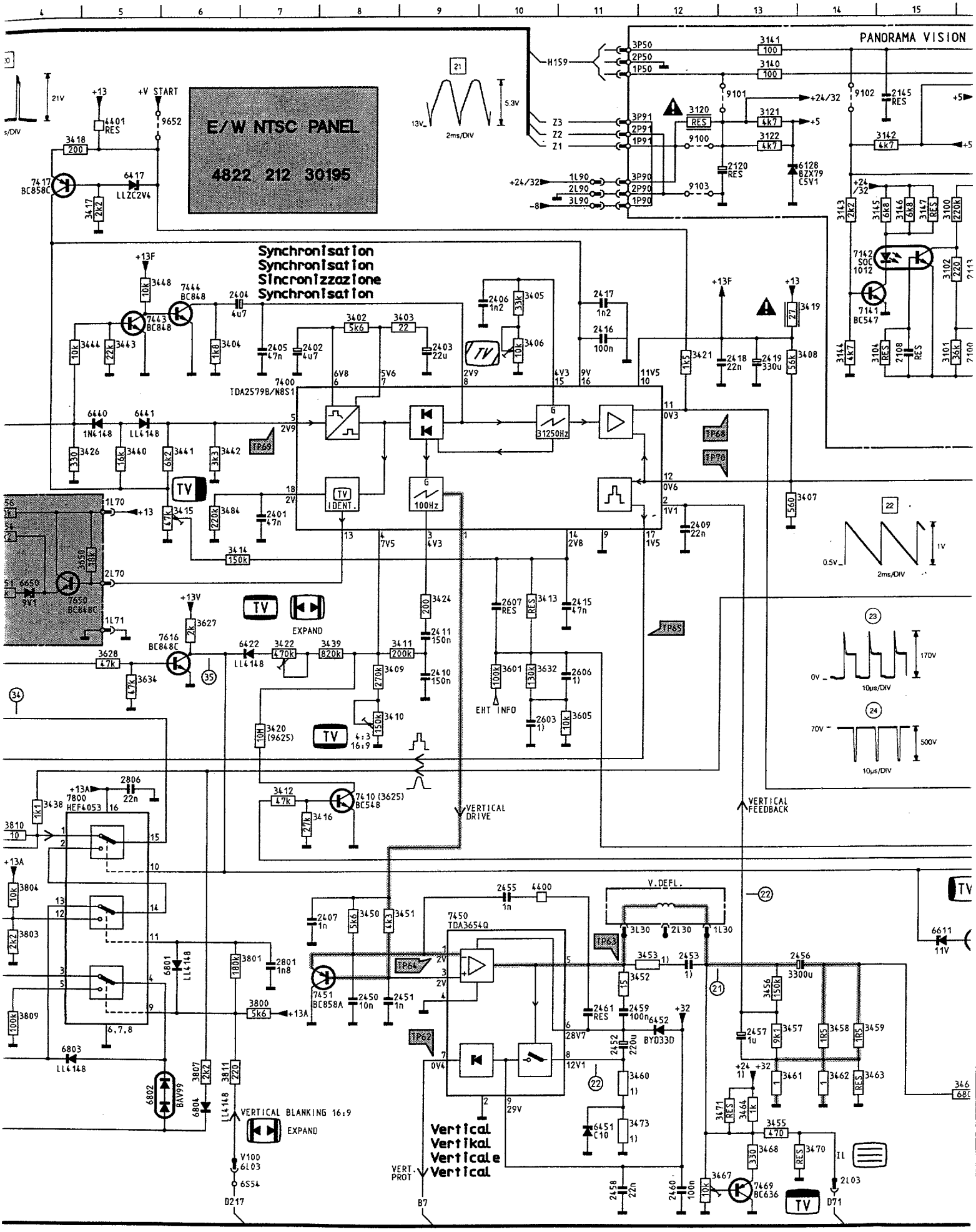

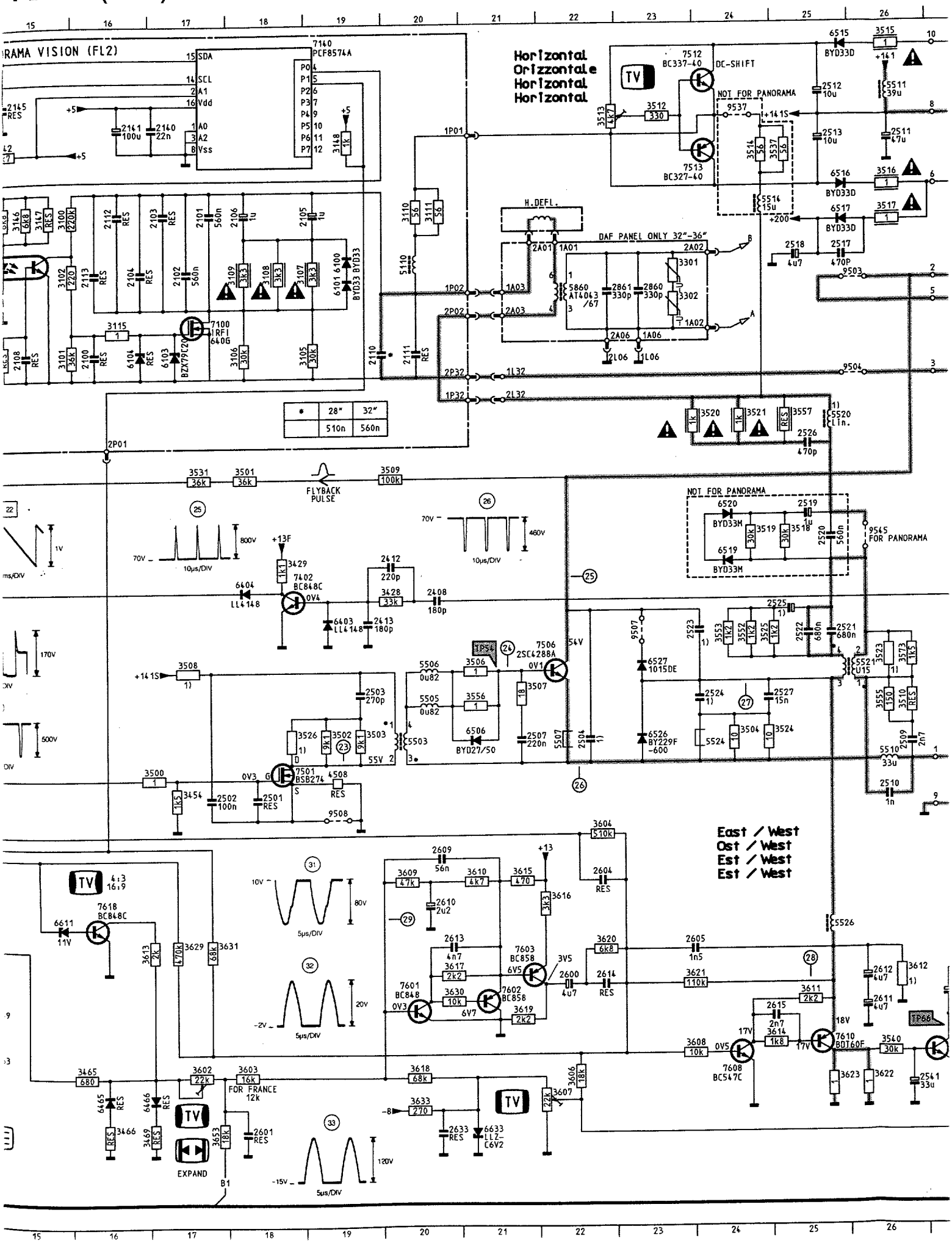
RAMA VISION (FL2)
7140 PCF8574A
SDA
SCL
A1
Vdd
A0
A2
Vss
P04
P15
P26
P37
P49
P5 10
P6 11
P7 12
Horizontal
Orizzontale
Horizontal
Horizontal
7512 BC337-40
DC-SHIFT
NOT FOR PANORAMA
7513 BC327-40
BYD33D
H.DEFL.
DAF PANEL ONLY 32"-36"
5860 AT4043 /67
7100 IRFI 640G
BZX79C20
BYD33
FLYBACK PULSE
7402 BC848C
LL4148
7506 2SC4288A
7501 BSB274
BD27/50
FOR PANORAMA
9545
7618 BC848C
7602 BC858
7603 BC858
7601 BC848
7610 BDT60F
7608 BC547C
East / West
Ost / West
Est / West
Est / West
FOR FRANCE 12k
EXPAND
28" 32"
510n 560n

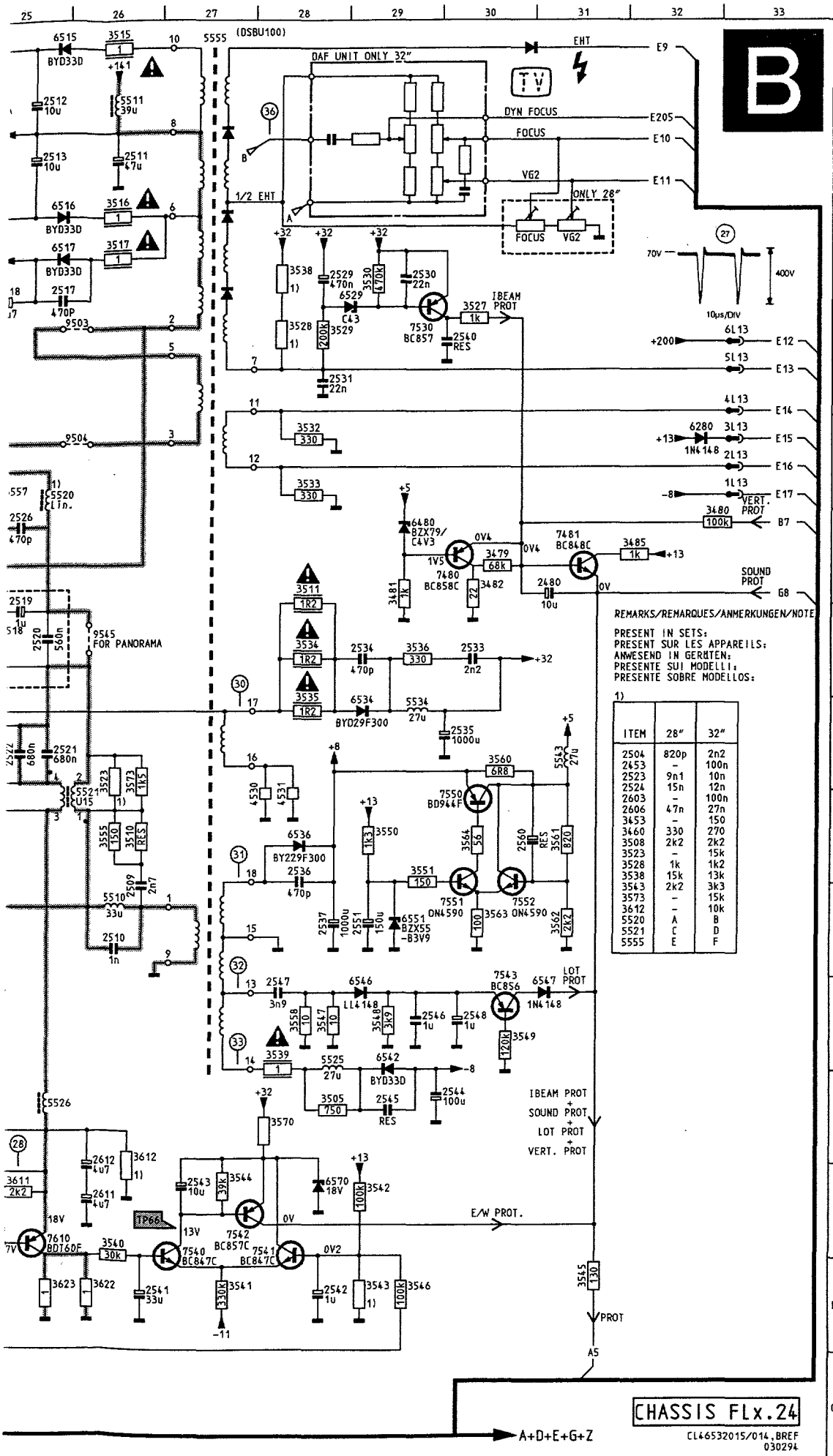

ITEM	28"	32"
2504	820p	2n2
2453	-	100n
2523	9n1	10n
2524	15n	12n
2603	-	100n
2606	47n	27n
3453	-	150
3460	330	270
3508	2k2	2k2
3523	-	15k
3528	1k	1k2
3538	15k	13k
3543	2k2	3k3
3573	-	15k
3612	-	10k
5520	A	B
5521	C	D
5555	E	F

	2100	D16	3110	C20	3538	C28	6466	N16
	2101	C17	3111	C20	3539	K28	6480	F29
	2102	C17	3115	D16	3540	M26	6506	I21
	2103	C17	3121	B13	3541	N27	6515	A25
A	2104	C16	3122	B13	3542	M29	6516	B25
	2105	C19	3140	A13	3543	N29	6517	C25
	2106	C18	3141	A13	3544	M27	6519	G24
	2108	D15	3142	B15	3545	N31	6520	F24
	2110	D19	3143	C14	3546	N29	6526	I23
	2111	D20	3144	D14	3547	K28	6527	I23
	2112	C16	3145	C15	3548	K29	6529	C29
	2113	C16	3146	C15	3549	K30	6534	H29
B	2120	B13	3147	C15	3550	I29	6536	I28
	2140	B17	3148	B19	3551	I29	6542	K29
	2141	B16	3301	C23	3552	H24	6546	K29
	2145	A15	3302	D23	3553	H24	6547	K31
	2401	G 7	3402	D 8	3555	I26	6551	J29
	2402	D 7	3403	D 9	3556	I21	6570	M28
	2403	D 9	3404	D 6	3557	E25	6611	L15
	2404	D 7	3405	D10	3558	K28	6633	N21
C	2405	D 7	3406	D10	3560	H30	6650	G 4
	2406	D10	3407	F14	3561	I31	6651	G 3
	2407	L 8	3408	D14	3562	J31	6801	L 6
	2408	H20	3409	H 8	3563	J30	6802	N 5
	2409	G12	3410	I 8	3564	I30	6803	M 4
	2410	I 9	3411	H 9	3570	L28	6804	N 6
	2411	H 9	3412	J 7	3573	H26	7100	D17
D	2412	G20	3413	G10	3601	H10	7140	A19
	2413	H19	3414	G 7	3602	N17	7141	D15
	2415	H11	3415	F 6	3603	N18	7142	C14
	2416	D11	3416	J 7	3604	K22	7400	E 7
	2417	D11	3417	C 5	3605	I11	7402	G18
	2418	E13	3418	B 4	3606	N22	7410	J 8
	2419	E13	3419	D14	3607	N22	7417	B 4
	2450	M 8	3420	I 7	3608	M23	7443	D 5
E	2451	M 8	3421	D12	3609	K20	7444	D 6
	2452	M11	3422	H 7	3610	K21	7450	L 9
	2453	L12	3424	G 9	3611	M25	7451	L 8
	2455	K10	3426	F 5	3612	L26	7469	O13
	2456	L14	3428	H20	3613	L16	7480	F30
	2457	M13	3429	G18	3614	M25	7481	F31
	2458	O11	3430	J 3	3615	K21	7501	J18
	2459	M11	3438	J 4	3616	K22	7506	H22
F	2460	O12	3439	H 8	3617	L20	7512	A24
	2461	M11	3440	F 5	3618	N20	7513	B24
	2480	F31	3441	F 6	3619	M21	7530	D29
	2501	J18	3442	F 6	3620	L22	7540	M27
	2502	J17	3443	D 5	3621	M23	7541	M28
	2503	I19	3444	D 5	3622	N26	7542	M27
	2504	I22	3448	D 5	3623	N25	7543	K30
G	2507	I21	3450	K 8	3625	J 8	7550	I30
	2509	J26	3451	K 9	3627	H 6	7551	J30
	2510	J26	3452	L11	3628	H 5	7552	J30
	2511	B26	3453	L12	3629	L17	7601	M20
	2512	A25	3454	J17	3630	M20	7602	M21
	2513	B25	3455	N13	3631	L17	7603	L21
	2517	C25	3456	L13	3632	H10	7608	N24
	2518	C25	3457	M13	3633	N20	7610	M25
H	2519	G25	3458	M14	3634	H 5	7616	H 6
	2520	G25	3459	M14	3650	G 5	7618	L16
	2521	H25	3460	M11	3651	G 4	7650	G 4
	2522	H25	3461	M13	3652	G 2	7651	G 3
	2523	H24	3462	M14	3653	H 3	7652	G 3
	2524	I24	3463	M14	3653	O17	7800	J 4
	2525	H25	3464	N13	3654	G 4	7801	N 3
I	2526	F25	3465	N16	3655	G 3	7802	K 3
	2527	I25	3466	N16	3656	F 4	9100	B12
	2529	C28	3467	D12	3800	M 7	9101	A13
	2530	C29	3468	N13	3801	L 7	9102	A14
	2531	D28	3469	O16	3802	M 3	9103	B12
	2533	G30	3470	N14	3803	L 4	9503	D26
	2534	G29	3471	N13	3804	K 4	9504	E26
J	2535	H30	3473	N11	3805	D 2	9507	H23
	2536	I28	3479	F30	3806	M 3	9508	J19
	2537	J28	3480	F32	3807	M 6	9537	A24
	2540	D30	3481	F29	3809	M 4	9545	G26
	2541	N26	3482	F30	3810	J 4	9625	I 7
	2542	N28	3484	F 6	3811	M 6	9652	B 6
	2543	M27	3485	F32	4400	K10		
	2544	L30	3500	J17	4401	B 5		
K	2545	L29	3501	F18	4405	F 3		
	2546	K29	3502	I19	4508	J19		
	2547	K28	3503	I19	4530	I28		
	2548	K30	3504	I24	4531	I28		
	2551	J29	3505	L28	5110	C20		
	2560	I30	3506	H21	5503	I20		
	2600	M22	3507	I21	5505	I20		
	2601	N18	3508	H17	5506	I20		
L	2603	I10	3509	F20	5507	I22		
	2604	K22	3510	I26	5510	J26		
	2605	L23	3511	F28	5511	A26		
	2606	I11	3512	A23	5514	C24		
	2607	H10	3513	B22	5520	E25		
	2609	K20	3514	B24	5521	I26		
	2610	L20	3515	A26	5524	I24		
M	2611	M26	3516	B26	5525	K28		
	2612	M26	3517	C26	5526	L25		
	2613	L20	3518	G25	5534	H29		
	2614	M22	3519	G24	5543	H31		
	2615	M25	3520	E24	5555	A27		
	2633	N20	3521	E24	5860	D22		
	2652	H 3	3523	H26	6100	C19		
	2801	L 7	3524	I25	6101	D19		
N	2805	E 2	3525	H24	6103	D17		
	2806	J 5	3526	I18	6104	D16		
	2860	D23	3527	C30	6128	B14		
	2861	D22	3528	C28	6280	E32		
	3100	C15	3529	D28	6403	H19		
	3101	D15	3530	C29	6404	G18		
	3102	C15	3531	F17	6417	B 5		
	3104	D15	3532	E28	6422	H 7		
O	3105	D19	3533	E28	6440	E 5		
	3106	D18	3534	G28	6441	E 5		
	3107	C19	3535	H28	6451	N11		
	3108	C18	3536	G29	6452	M12		
	3109	C18	3537	B25	6465	N16		

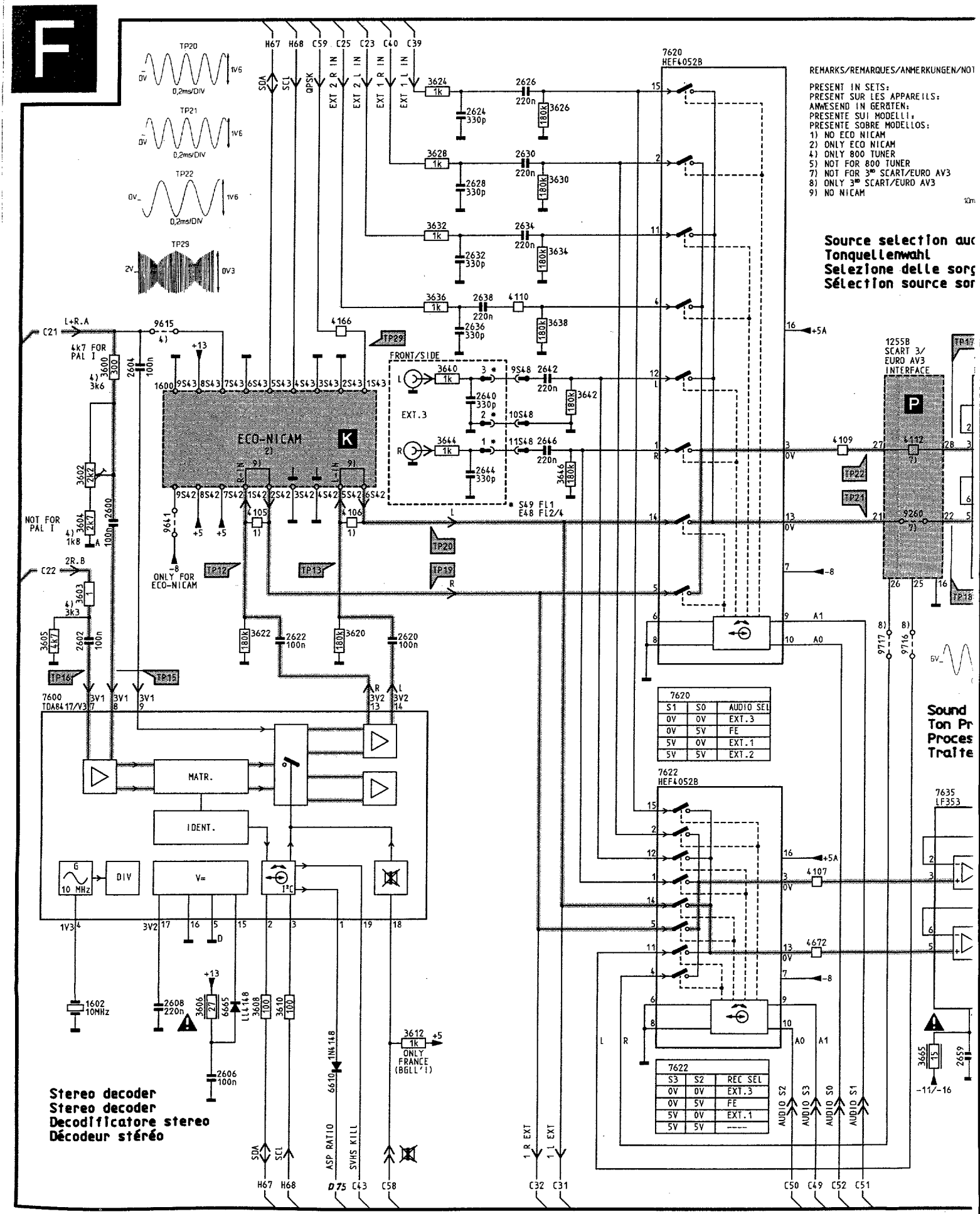
F
TP20
TP21
TP22
TP29
0,2ms/DIV
H67 H68 C59 C25 C23 C40 C39
SDA SCL QPSK EXT 2 R IN EXT 2 L IN EXT 1 R IN EXT 1 L IN
7620 HEF4052B
REMARKS/REMARQUES/ANMERKUNGEN/NOT
PRESENT IN SETS:
PRESENT SUR LES APPAREILS:
ANWESEND IN GERÄTEN:
PRESENTE SUI MODELLI:
PRESENTE SOBRE MODELLOS:
1) NO ECO NICAM
2) ONLY ECO NICAM
4) ONLY 800 TUNER
5) NOT FOR 800 TUNER
7) NOT FOR 3RD SCART/EURO AV3
8) ONLY 3RD SCART/EURO AV3
9) NO NICAM
Source selection auc
Tonquellenwahl
Selezione delle sorg
Sélection source sor
FRONT/SIDE
EXT.3
ECO-NICAM K
ONLY FOR ECO-NICAM
NOT FOR PAL I
4k7 FOR PAL I
1255B SCART 3/ EURO AV3 INTERFACE
* S49 FL1 E48 FL2/4
7600 TDA8417/V3
MATR.
IDENT.
DIV
V=
7620
S1 S0 AUDIO SEL
0V 0V EXT.3
0V 5V FE
5V 0V EXT.1
5V 5V EXT.2
7622 HEF4052B
7622
S3 S2 REC SEL
0V 0V EXT.3
0V 5V FE
5V 0V EXT.1
5V 5V -----
7635 LF353
Sound
Ton Pr
Proces
Traite
Stereo decoder
Stereo decoder
Decodificatore stereo
Décodeur stéréo
ONLY FRANCE (BGLL'I)
ASP RATIO SVHS KILL
1 R EXT 1 L EXT
AUDIO S2 AUDIO S3 AUDIO S0 AUDIO S1

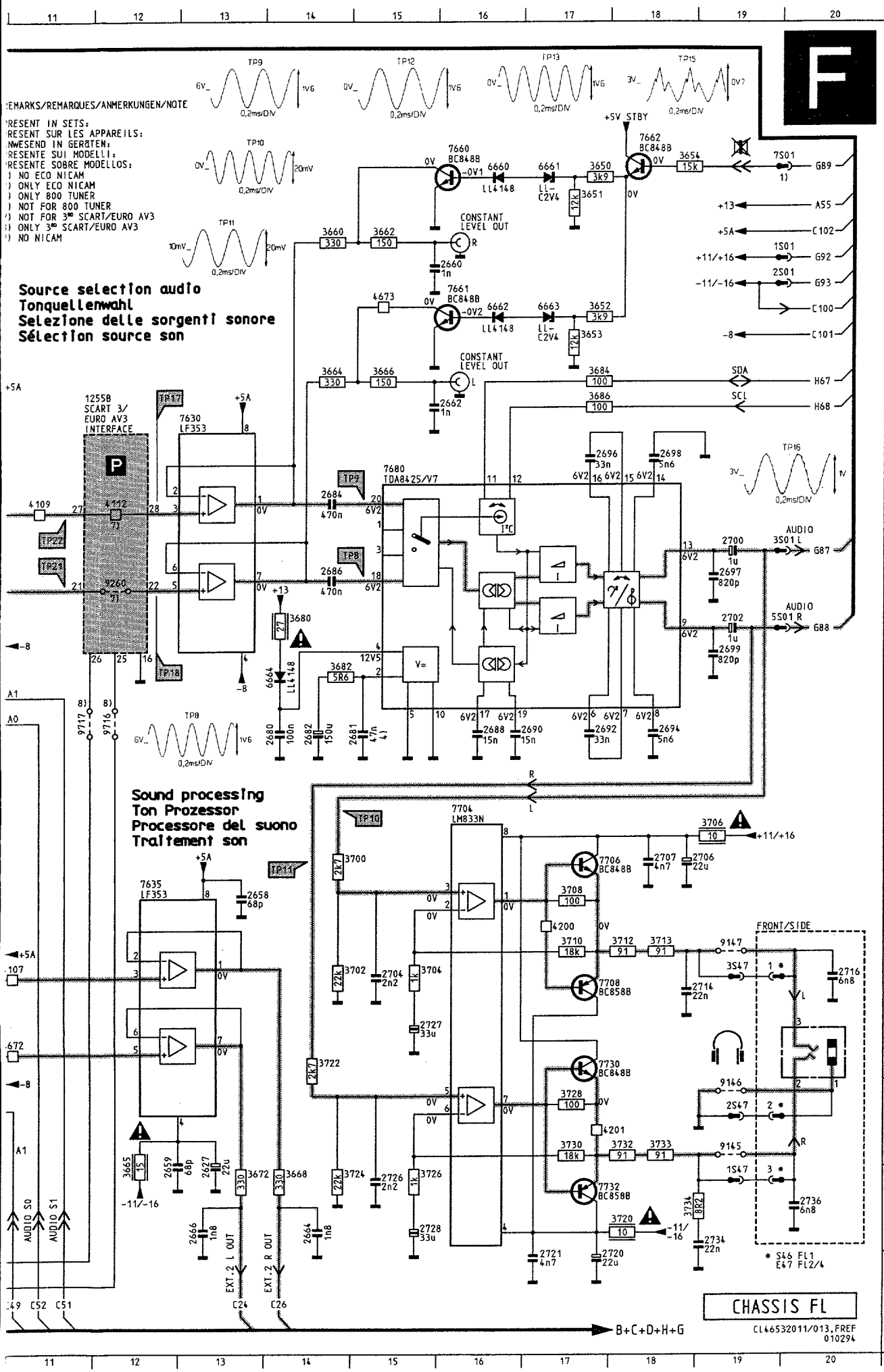

	1255	E11	4110	D 7
	1600	E 2	4112	F12
	1602	M 1	4166	D 5
	2600	G 2	4200	K17
A	2602	H 1	4201	M17
	2604	E 2	4672	L11
	2606	N 3	4673	C15
	2608	M 2	6610	N 5
	2620	H 5	6660	B16
	2622	H 4	6661	B17
	2624	B 6	6662	D16
	2626	A 7	6663	D17
B	2627	M13	6664	H14
	2628	C 6	6665	M 3
	2630	B 7	7600	I 1
	2632	D 6	7620	A 9
	2634	C 7	7622	J 9
	2636	D 6	7630	E12
	2638	D 6	7635	J12
	2640	E 6	7660	B16
C	2642	E 7	7661	C16
	2644	F 6	7662	B18
	2646	F 7	7680	E15
	2658	J13	7704	I16
	2659	M12	7706	J17
	2660	C16	7708	K17
	2662	E16	7730	L17
D	2664	N14	7732	N17
	2666	N13	9145	M19
	2680	H14	9146	M19
	2681	H15	9147	K19
	2682	H14	9260	G12
	2684	F14	9615	D 2
	2686	G14	9641	G 2
E	2688	H16	9716	H12
	2690	H16	9717	H11
	2692	H17		
	2694	H18		
	2696	E17		
	2697	G19		
	2698	E18		
	2699	H19		
F	2700	F19		
	2702	G19		
	2704	K15		
	2706	J18		
	2707	J18		
	2714	K18		
	2716	K20		
	2720	O17		
G	2721	O17		
	2726	N15		
	2727	L15		
	2728	N15		
	2734	N19		
	2736	N20		
	3600	E 2		
	3602	F 1		
H	3603	H 1		
	3604	G 1		
	3605	H 1		
	3606	M 3		
	3608	M 4		
	3610	M 4		
	3612	M 6		
I	3620	H 5		
	3622	H 3		
	3624	A 6		
	3626	B 7		
	3628	B 6		
	3630	C 7		
	3632	C 6		
	3634	C 7		
J	3636	D 6		
	3638	D 7		
	3640	E 6		
	3642	E 8		
	3644	F 6		
	3646	F 7		
	3650	B17		
K	3651	B17		
	3652	D17		
	3653	D17		
	3654	B18		
	3660	C14		
	3662	C15		
	3664	D14		
	3665	M12		
L	3666	D15		
	3668	N14		
	3672	N13		
	3680	G14		
	3682	H14		
	3684	D17		
	3686	E17		
	3700	J14		
M	3702	K14		
	3704	K15		
	3706	J19		
	3708	J17		
	3710	K17		
	3712	K18		
	3713	K18		
N	3720	N18		
	3722	L14		
	3724	N14		
	3726	N15		
	3728	M17		
	3730	M17		
	3732	M18		
	3733	M18		
O	3734	N18		
	4105	G 4		
	4106	G 5		
	4107	K11		
	4109	F11		

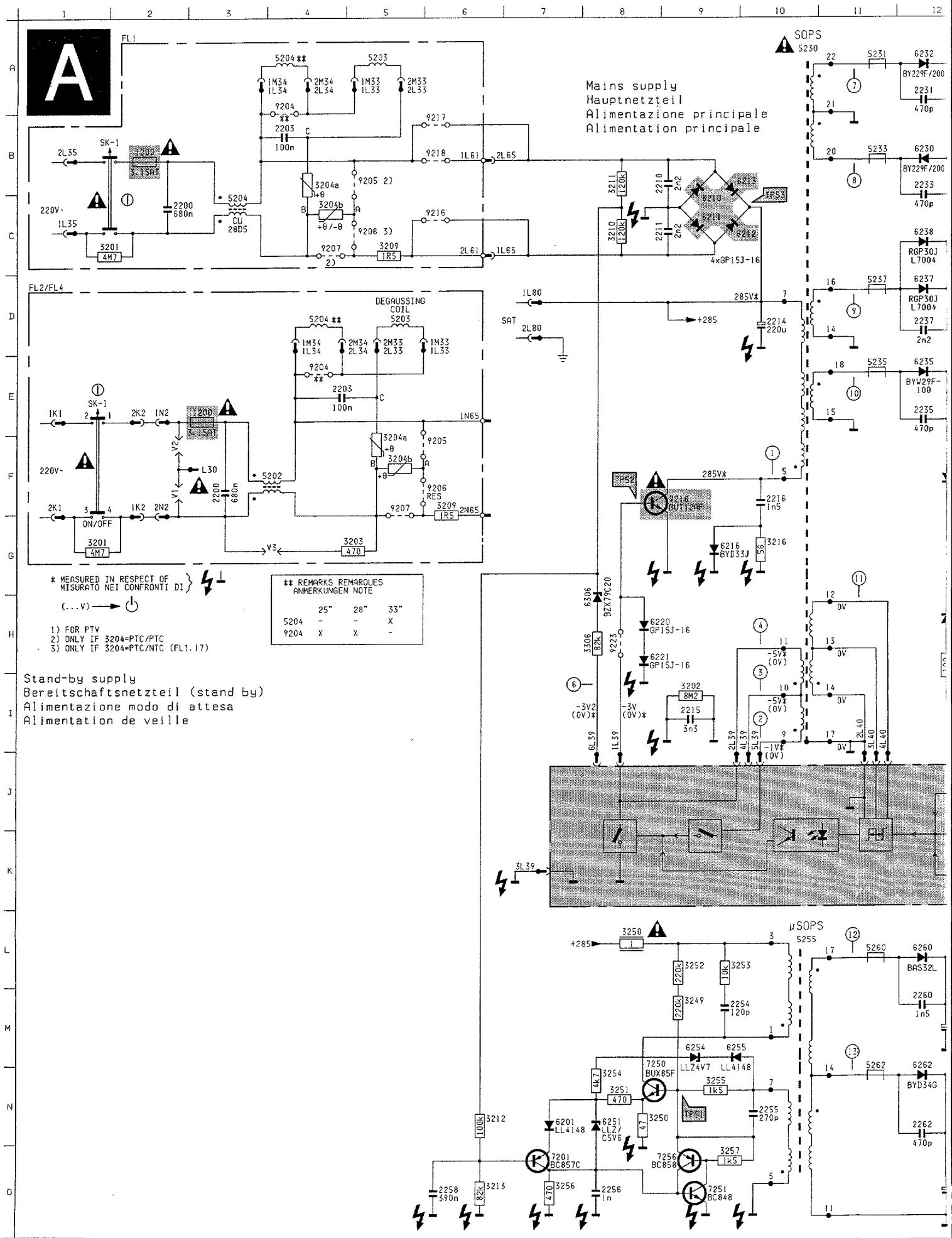
A
FL1
Mains supply
Hauptnetzteil
Alimentazione principale
Alimentation principale
SOPS
5230
FL2/FL4
DEGAUSSING COIL
SK-1
ON/OFF
220V~
285V*
+285
SAT
μSOPS
5255
TP52
TP53
TP51
4xGP15J-16
* MEASURED IN RESPECT OF MISURATO NEI CONFRONTI DI
(...V)
1) FOR PTV
2) ONLY IF 3204=PTC/PTC
3) ONLY IF 3204=PTC/NTC (FL1.17)
** REMARKS REMARQUES ANMERKUNGEN NOTE
25" 28" 33"
5204 - - X
9204 X X -
Stand-by supply
Bereitschaftsnetzteil (stand by)
Alimentazione modo di attesa
Alimentation de veille

FLx.26/.27 (4:3)

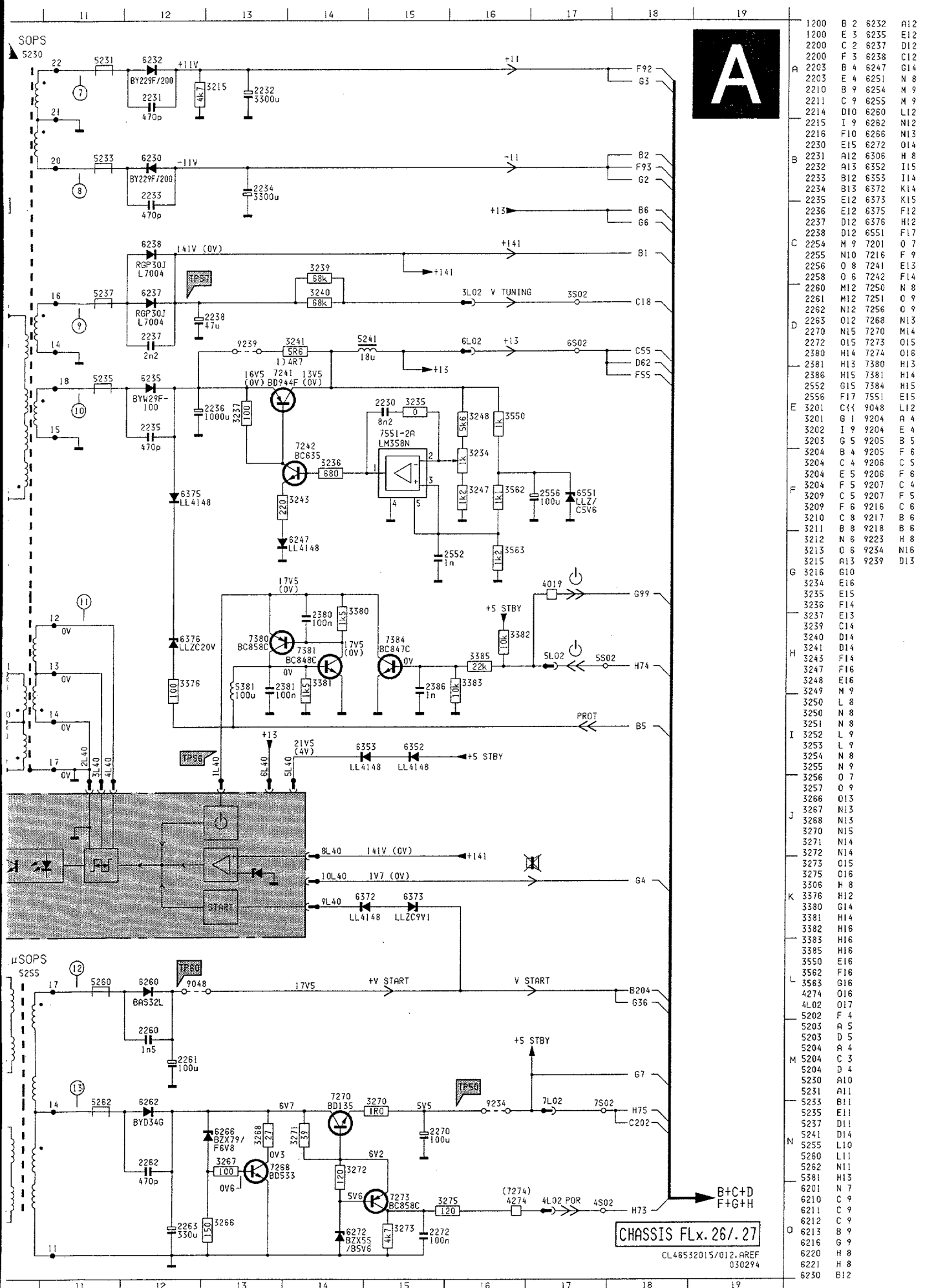

	1200	B 2	6232	A12
	1200	E 3	6235	E12
	2200	C 2	6237	D12
	2200	F 3	6238	C12
A	2203	B 4	6247	G14
	2203	E 4	6251	N 8
	2210	B 9	6254	M 9
	2211	C 9	6255	M 9
	2214	D10	6260	L12
	2215	I 9	6262	N12
	2216	F10	6266	N13
	2230	E15	6272	O14
B	2231	A12	6306	H 8
	2232	A13	6352	I15
	2233	B12	6353	I14
	2234	B13	6372	K14
	2235	E12	6373	K15
	2236	E12	6375	F12
	2237	D12	6376	H12
	2238	D12	6551	F17
C	2254	M 9	7201	O 7
	2255	N10	7216	F 9
	2256	O 8	7241	E13
	2258	O 6	7242	F14
	2260	M12	7250	N 8
	2261	M12	7251	O 9
	2262	N12	7256	O 9
D	2263	O12	7268	N13
	2270	N15	7270	M14
	2272	O15	7273	O15
	2380	H14	7274	O16
	2381	H13	7380	H13
	2386	H15	7381	H14
	2552	G15	7384	H15
	2556	F17	7551	E15
E	3201	C14	9048	L12
	3201	G 1	9204	A 4
	3202	I 9	9204	E 4
	3203	G 5	9205	B 5
	3204	B 4	9205	F 6
	3204	C 4	9206	C 5
	3204	E 5	9206	F 6
F	3204	F 5	9207	C 4
	3209	C 5	9207	F 5
	3209	F 6	9216	C 6
	3210	C 8	9217	B 6
	3211	B 8	9218	B 6
	3212	N 6	9223	H 8
	3213	O 6	9234	N16
	3215	A13	9239	D13
G	3216	G10		
	3234	E16		
	3235	E15		
	3236	F14		
	3237	E13		
	3239	C14		
	3240	D14		
H	3241	D14		
	3243	F14		
	3247	F16		
	3248	E16		
	3249	M 9		
	3250	L 8		
	3250	N 8		
	3251	N 8		
I	3252	L 9		
	3253	L 9		
	3254	N 8		
	3255	N 9		
	3256	O 7		
	3257	O 9		
	3266	O13		
J	3267	N13		
	3268	N13		
	3270	N15		
	3271	N14		
	3272	N14		
	3273	O15		
	3275	O16		
	3306	H 8		
K	3376	H12		
	3380	G14		
	3381	H14		
	3382	H16		
	3383	H16		
	3385	H16		
	3550	E16		
	3562	F16		
L	3563	G16		
	4274	O16		
	4L02	O17		
	5202	F 4		
	5203	A 5		
	5203	D 5		
	5204	A 4		
M	5204	C 3		
	5204	D 4		
	5230	A10		
	5231	A11		
	5233	B11		
	5235	E11		
	5237	D11		
	5241	D14		
N	5255	L10		
	5260	L11		
	5262	N11		
	5381	H13		
	6201	N 7		
	6210	C 9		
	6211	C 9		
	6212	C 9		
O	6213	B 9		
	6216	G 9		
	6220	H 8		
	6221	H 8		
	6230	B12		

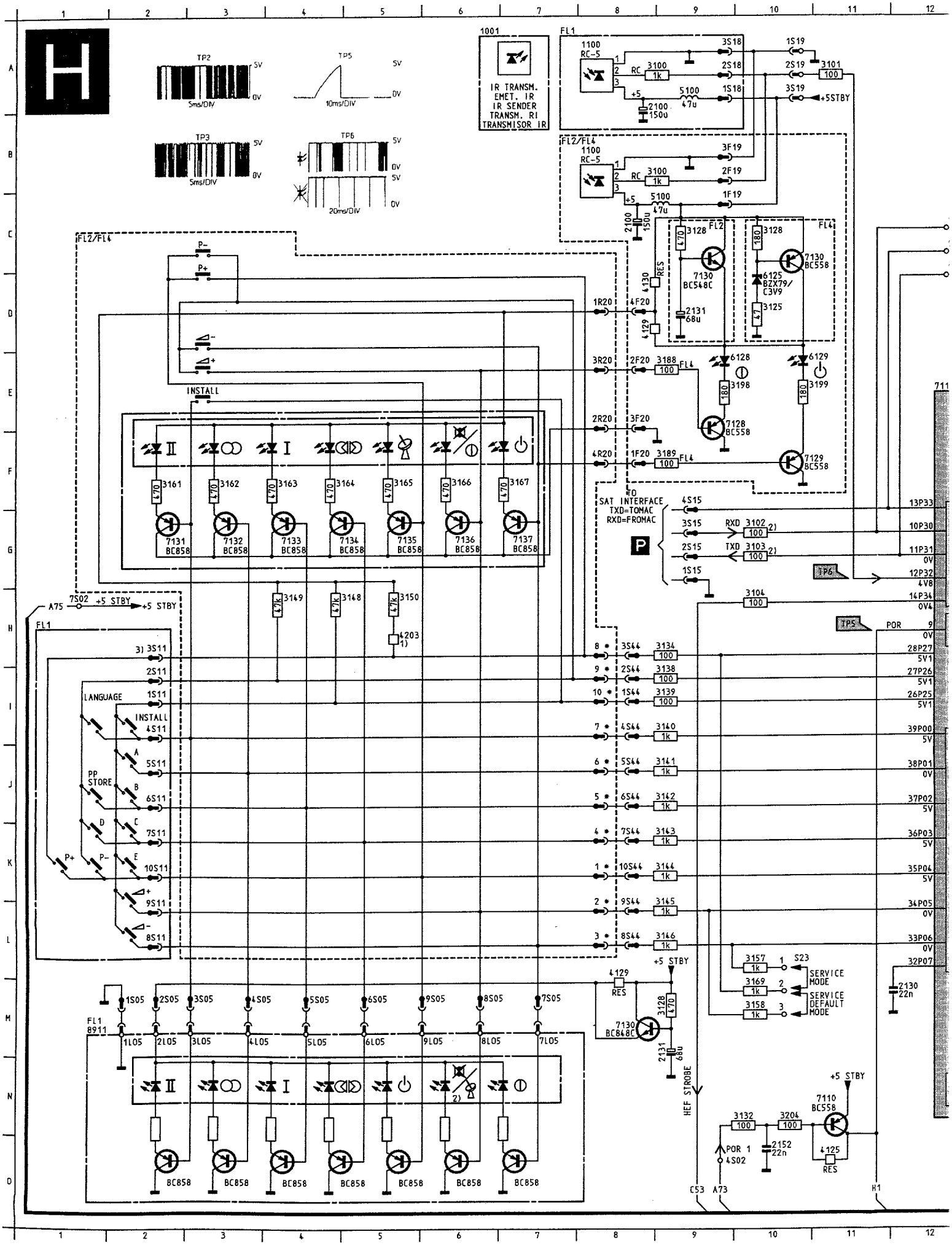
H
TP2
5V
0V
5ms/DIV
TP5
10ms/DIV
TP3
TP6
20ms/DIV
1001
IR TRANSM.
EMET. IR
IR SENDER
TRANSM. RI
TRANSMISOR IR
FL1
1100
RC-5
RC
3100
1k
5100
47u
2100
150u
3S18
2S18
1S18
1S19
2S19
3101
100
3S19
+5STBY
FL2/FL4
3F19
2F19
1F19
3128
7130
BC548C
7130
BC558
6125
BZX79/
C3V9
3125
2131
68u
4130
RES
4129
1R20
4F20
3R20
2F20
3188
6128
6129
3198
3199
2R20
3F20
4R20
1F20
3189
7128
7129
INSTALL
3161
3162
3163
3164
3165
3166
3167
7131
7132
7133
7134
7135
7136
7137
BC858
SAT INTERFACE
TXD=TOMAC
RXD=FROMAC
4S15
3S15
2S15
1S15
RXD 3102
TXD 3103
13P33
10P30
11P31
0V
12P32
4V8
14P34
0V4
TP6
TP5
POR
9
0V
28P27
5V1
27P26
5V1
26P25
5V1
39P00
5V
38P01
0V
37P02
5V
36P03
5V
35P04
5V
34P05
0V
33P06
0V
32P07
A75
7S02 +5 STBY
+5 STBY
3149
3148
3150
4203
3) 3S11
2S11
1S11
4S11
5S11
6S11
7S11
10S11
9S11
8S11
LANGUAGE
INSTALL
PP
STORE
P+
P-
8 * 3S44 3134
9 * 2S44 3138
10 * 1S44 3139
7 * 4S44 3140
6 * 5S44 3141
5 * 6S44 3142
4 * 7S44 3143
1 * 10S44 3144
2 * 9S44 3145
3 * 8S44 3146
3104
100
3157
3169
3158
S23
SERVICE
MODE
SERVICE
DEFAULT
MODE
2130
22n
1S05
2S05
3S05
4S05
5S05
6S05
9S05
8S05
7S05
FL1
8911
1LO5
2LO5
3LO5
4LO5
5LO5
6LO5
9LO5
8LO5
7LO5
4129
RES
3128
7130
BC848C
2131
68u
HEF STROBE
+5 STBY
7110
BC558
3132
3204
POR 1
4S02
2152
22n
4125
RES
C53
A73
H1

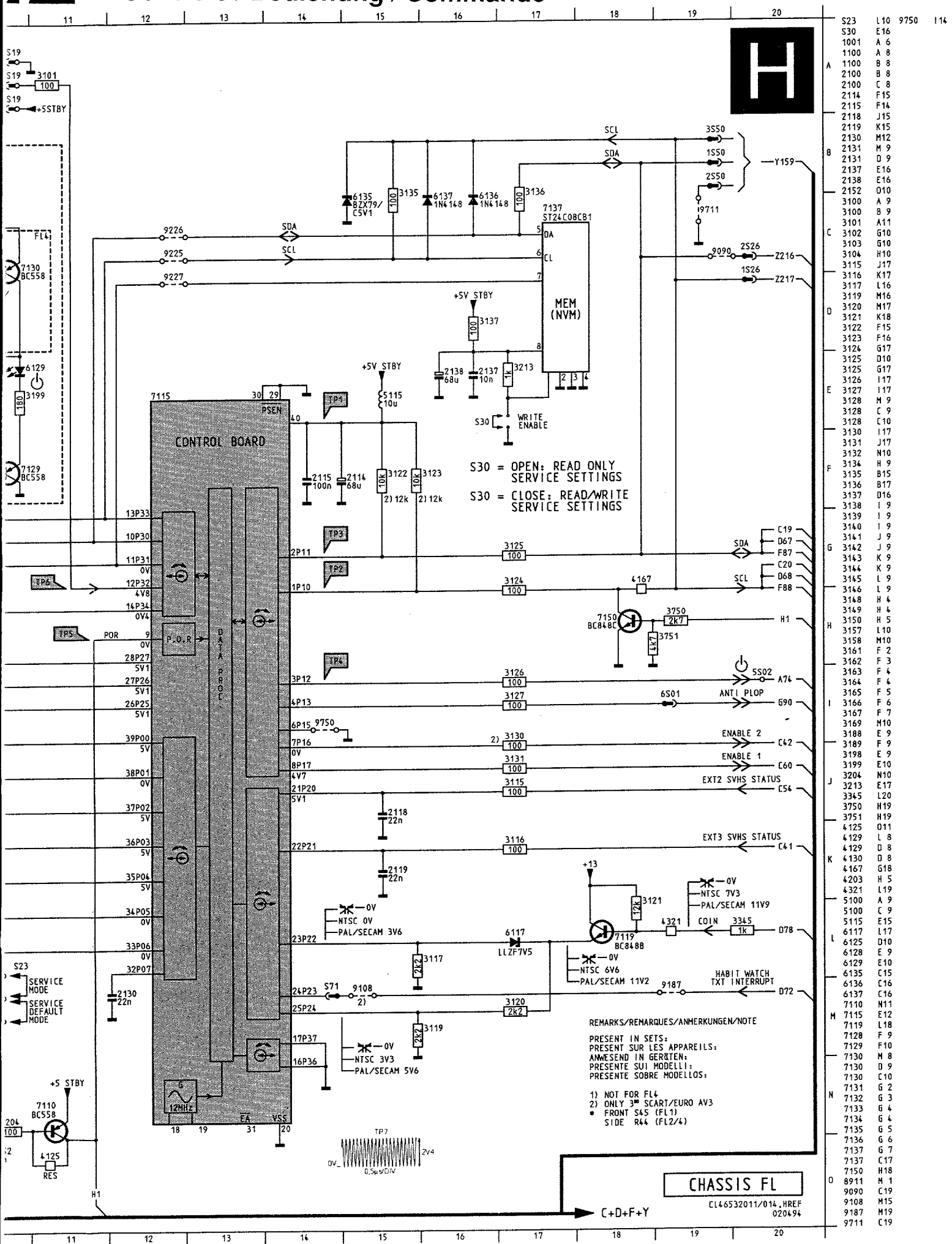
CONTROL BOARD
MEM (NVM)
ST24C08CB1
S30 = OPEN: READ ONLY SERVICE SETTINGS
S30 = CLOSE: READ/WRITE SERVICE SETTINGS
WRITE ENABLE
SERVICE MODE
SERVICE DEFAULT MODE
REMARKS/REMARQUES/ANMERKUNGEN/NOTE
PRESENT IN SETS:
PRESENT SUR LES APPAREILS:
ANWESEND IN GERÄTEN:
PRESENTE SUI MODELLI:
PRESENTE SOBRE MODELLOS:
1) NOT FOR FL4
2) ONLY 3rd SCART/EURO AV3
* FRONT S45 (FL1)
SIDE R44 (FL2/4)
CHASSIS FL
C+D+F+Y

PCS 73 736

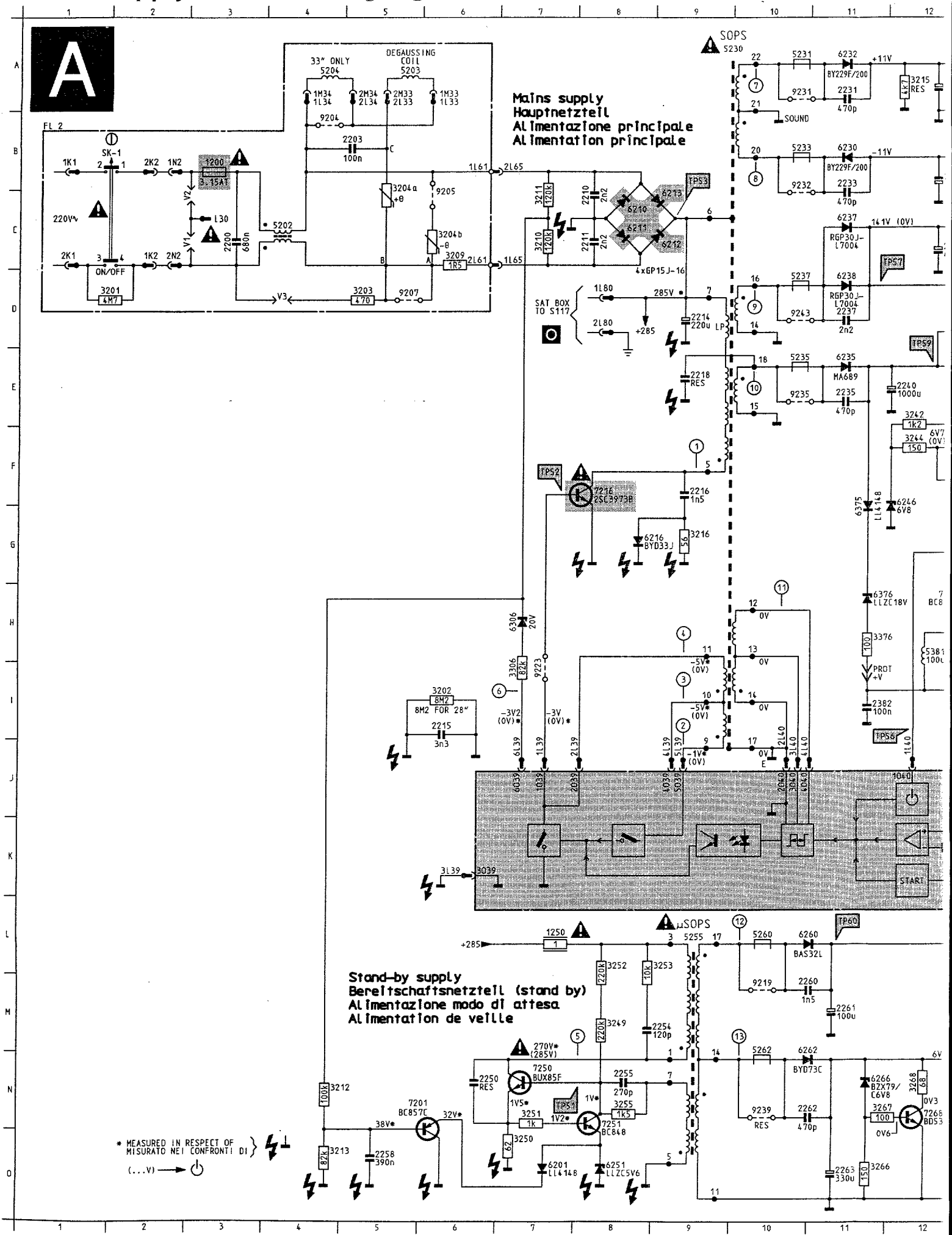
A
Mains supply
Hauptnetzteil
Alimentazione principale
Alimentation principale
Stand-by supply
Bereitschaftsnetzteil (stand by)
Alimentazione modo di attesa
Alimentation de veille
SOPS
µSOPS
33" ONLY
DEGAUSSING COIL
SAT BOX TO S117
ON/OFF
8M2 FOR 28"
START
PROT +V
SOUND
* MEASURED IN RESPECT OF
MISURATO NEI CONFRONTI DI
(...V)

FLx.24 (16:9)

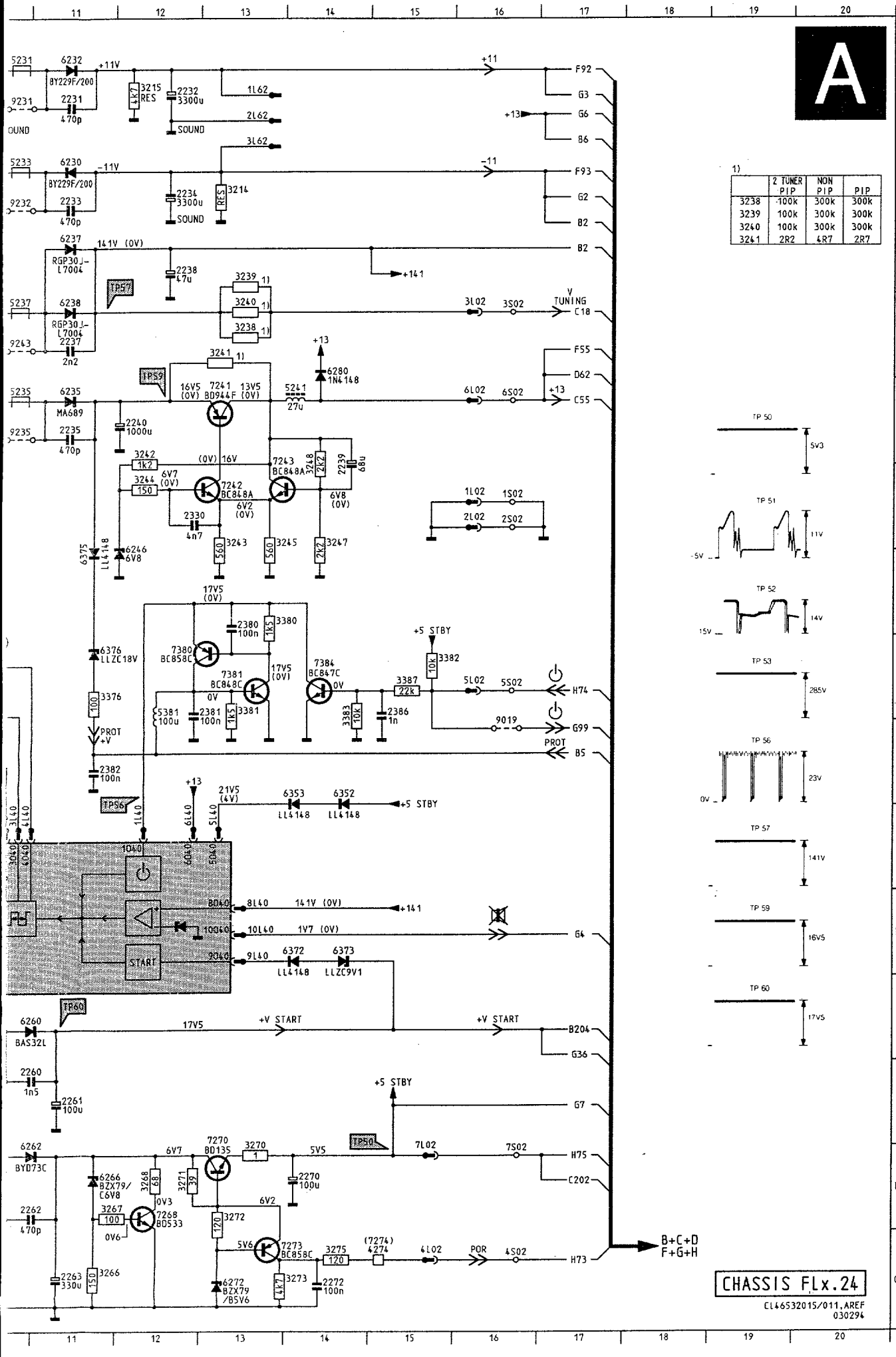

(727 O15 6262 N11
1200 B 3 6266 N11
1200 B 3 6272 O13
1250 L 7 6280 D14
2200 C 3 6306 H 7
2200 C 3 6352 I 14
2203 B 5 6353 I 14
2203 B 5 6372 K14
2210 C 8 6373 K14
2211 C 8 6375 G11
2214 D 9 6376 H11
2215 I 6 7201 N 6
2216 F 9 7216 F 8
2218 E 9 7241 E13
2231 A11 7242 F13
2232 A12 7243 F13
2233 B11 7250 N 7
2234 B12 7251 N 8
2235 E11 7268 N12
2237 D11 7270 M13
2238 C12 7273 O13
2239 E14 7380 H12
2240 E12 7381 H13
2250 N 6 7384 H14
2254 M 9 9019 I 16
2255 N 8 9204 B 4
2258 O 5 9205 C 6
2260 M11 9205 C 6
2261 M11 9207 C 5
2262 N11 9207 D 5
2263 O11 9218 B 5
2270 N14 9219 M10
2272 O14 9223 I 7
2330 F12 9231 A10
2380 G13 9232 B10
2381 H12 9235 E10
2382 I11 9239 N10
2386 H15 9243 D10
3201 D 1
3201 D 1
3202 I 6
3203 D 5
3204 B 5
3204 C 5
3204 B 5
3204 C 6
3209 C 6
3209 C 6
3210 C 7
3211 C 7
3212 N 4
3213 O 4
3214 B13
3215 A12
3216 G 9
3238 D13
3239 C13
3240 D13
3241 D13
3242 E12
3243 F13
3244 F12
3245 F13
3247 F14
3248 E14
3249 M 8
3250 O 7
3251 N 7
3252 L 8
3253 L 9
3255 N 8
3266 O11
3267 N11
3268 N12
3270 N13
3271 N12
3272 N13
3273 O14
3275 O14
3306 I 7
3376 H11
3380 G13
3381 H13
3382 H15
3383 H14
3387 H15
5202 C 4
5203 A 5
5203 A 5
5204 C 4
5204 A 4
5204 A 4
5230 A 9
5231 A10
5233 B10
5235 E10
5237 D10
5241 E14
5255 L 9
5260 L10
5262 N10
5381 H12
6201 O 7
6210 C 8
6211 C 8
6212 C 9
6213 C 9
6216 G 8
6230 B11
6232 A11
6235 E11
6237 C11
6238 D11
6246 G12
6251 O 8
6260 L11

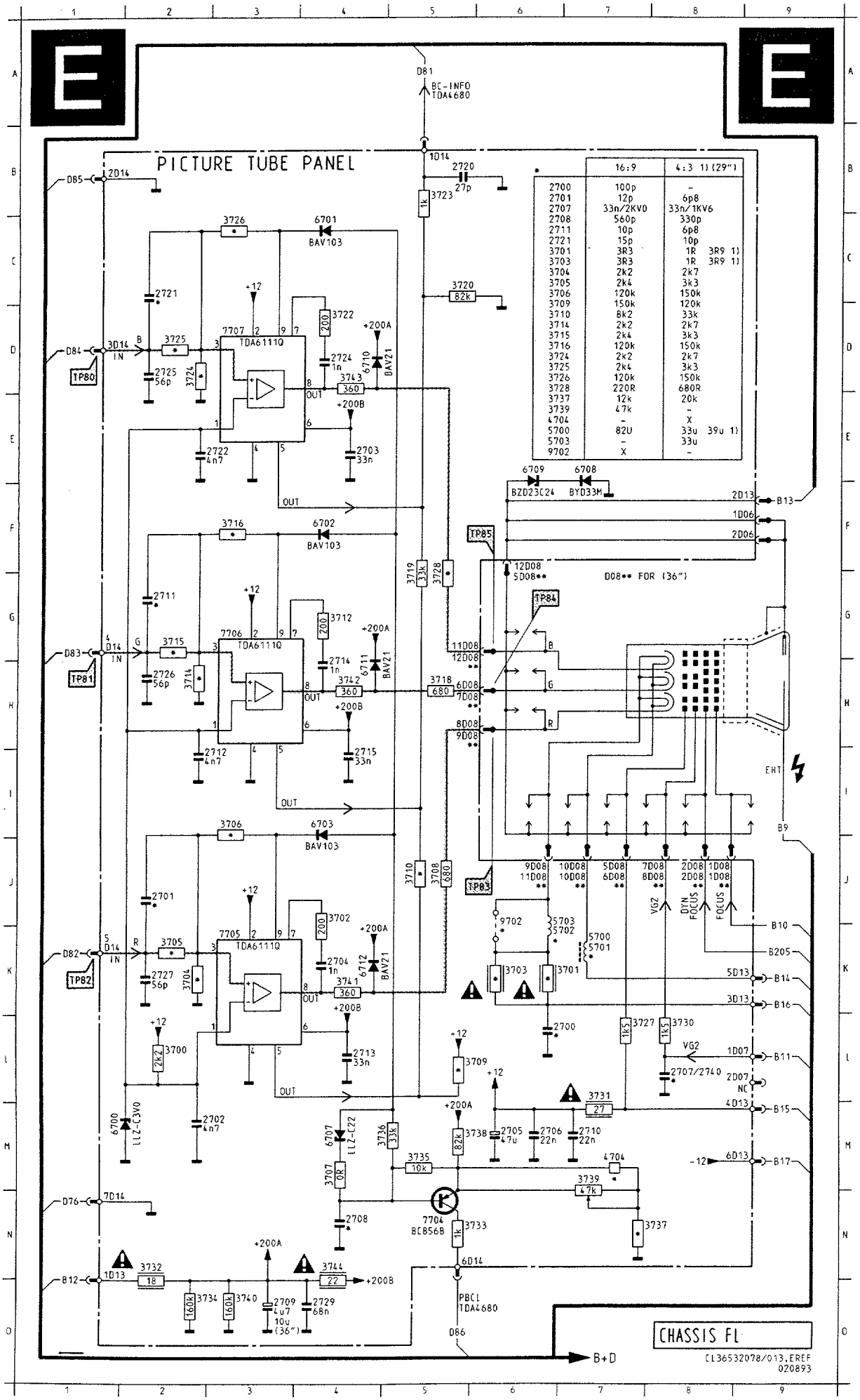

	16:9	4:3 1) (29")
2700	100p	-
2701	12p	6p8
2707	33n/2KV0	33n/1KV6
2708	560p	330p
2711	10p	6p8
2721	15p	10p
3701	3R3	1R 3R9 1)
3703	3R3	1R 3R9 1)
3704	2k2	2k7
3705	2k4	3k3
3706	120k	150k
3709	150k	120k
3710	8k2	33k
3714	2k2	2k7
3715	2k4	3k3
3716	120k	150k
3724	2k2	2k7
3725	2k4	3k3
3726	120k	150k
3728	220R	680R
3737	12k	20k
3739	47k	-
4704	-	X
5700	82U	33u 39u 1)
5703	-	33u
9702	X	-

2700	K	6
2701	J	2
2702	M	2
2703	L	4
2704	K	4
2705	M	6
2706	M	6
2707	L	8
2708	N	4
2709	E	7
2710	M	7
2711	G	2
2712	I	2
2713	E	4
2714	H	4
2715	I	4
2720	B	5
2721	C	2
2722	E	2
2724	D	4
2725	D	2
2726	H	2
2727	K	2
2729	E	6
3700	L	2
3701	K	6
3702	J	4
3703	K	6
3704	K	2
3705	K	2
3706	I	3
3707	M	4
3708	J	5
3709	L	5
3710	J	5
3712	G	4
3714	H	2
3715	G	2
3716	F	3
3718	H	5
3719	G	5
3720	C	5
3722	D	4
3723	B	5
3724	D	2
3726	C	3
3727	K	7
3728	G	5
3730	K	8
3731	L	7
3732	D	8
3733	N	5
3734	E	8
3735	M	5
3736	M	5
3737	N	6
3738	M	5
3739	M	6
3740	E	7
3741	K	4
3742	H	4
3743	D	4
3744	D	6
4709	I	2
5700	J	7
6700	M	1
6701	C	4
6702	F	4
6703	I	4
6707	M	4
6708	E	7
6709	E	6
6710	D	4
6711	H	4
6712	K	4
7704	N	5
7705	K	3
7706	G	3
7707	D	3

Platines Tube-image

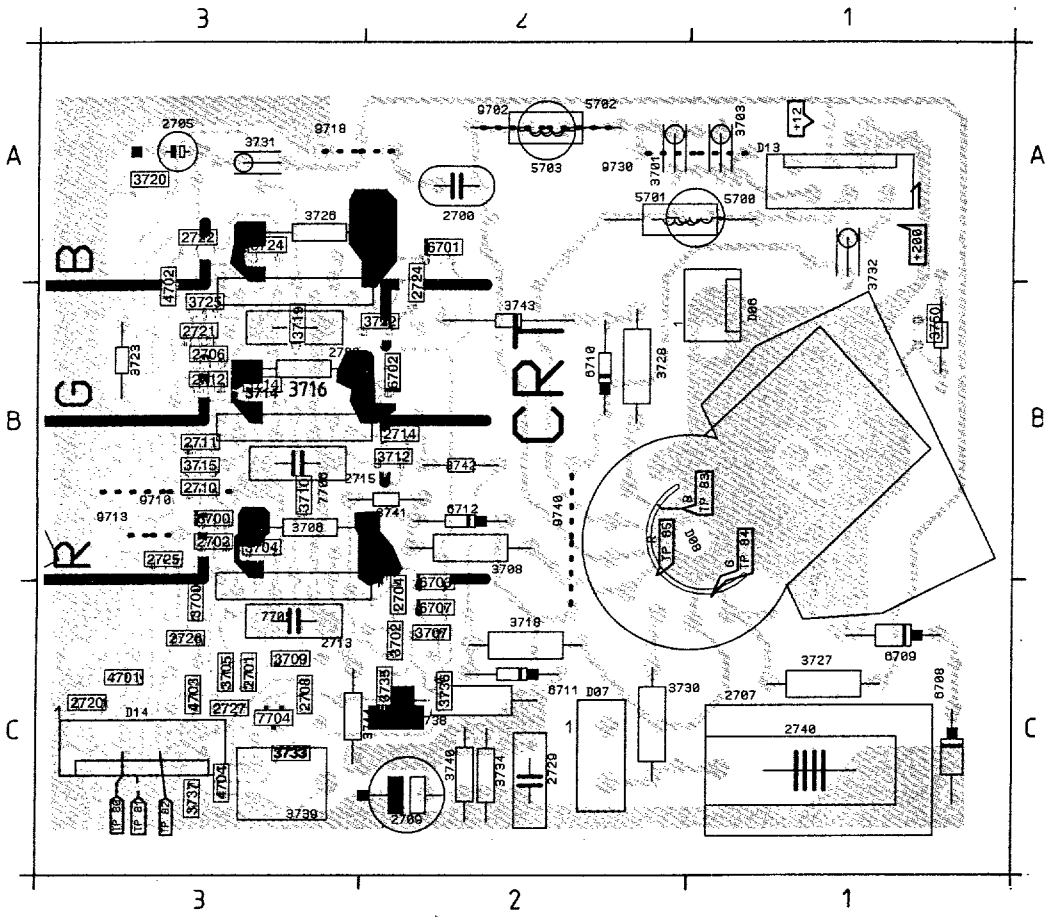

D06	B1	3708	B2	5701	A2
D07	C2	3709	C3	5702	A2
D08	B1	3710	B3	5703	A2
D13	A1	3712	B2	6700	B3
D14	C3	3714	B3	6701	A2
2700	A2	3715	B3	6702	B2
2701	C3	3716	B3	6703	C2
2702	B3	3718	C2	6707	C2
2703	B3	3719	B3	6708	C1
2704	C2	3720	A3	6709	C1
2705	A3	3722	B2	6710	B2
2706	B3	3723	B3	6711	C2
2707	C1	3724	A3	6712	B2
2708	C3	3725	B3	7704	C3
2709	C2	3726	A3	7705	C3
2710	B3	3727	C1	7706	B3
2711	B3	3728	B2	7707	B3
2712	B3	3730	C2	9702	A2
2713	C3	3731	A3	9710	B3
2714	B2	3732	A1	9713	B3
2715	B3	3733	C3	9718	A3
2720	C3	3734	C2	9730	A1
2721	B3	3735	C2	9740	B2
2722	A3	3736	C2		
2724	B2	3738	C2		
2725	B3	3739	C3		
2726	C3	3740	C2		
2727	C3	3741	B2		
2729	C2	3742	B2		
2740	C1	3743	B2		
3700	C3	3744	C3		
3701	A2	3750	B1		
3702	C2	3751	B1		
3703	A1	4701	C3		
3704	B3	4702	B3		
3705	C3	4703	C3		
3706	B3	4704	C3		
3707	C2	5700	A1		

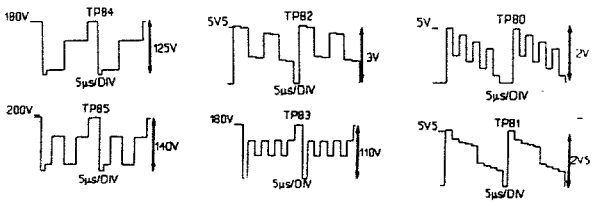

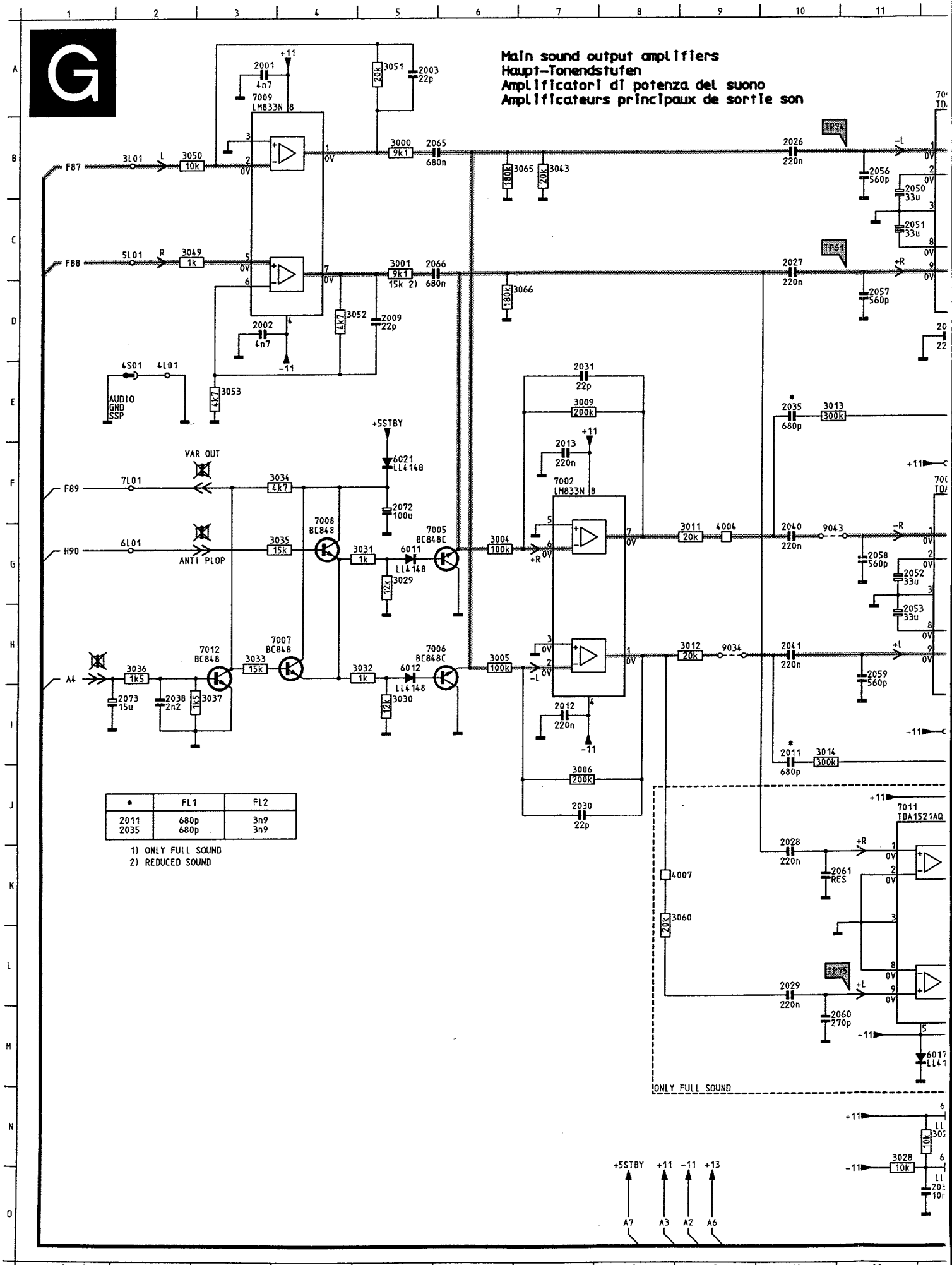

*	FL1	FL2
2011 2035	680p 680p	3n9 3n9

1) ONLY FULL SOUND
2) REDUCED SOUND

Amplificateur audio

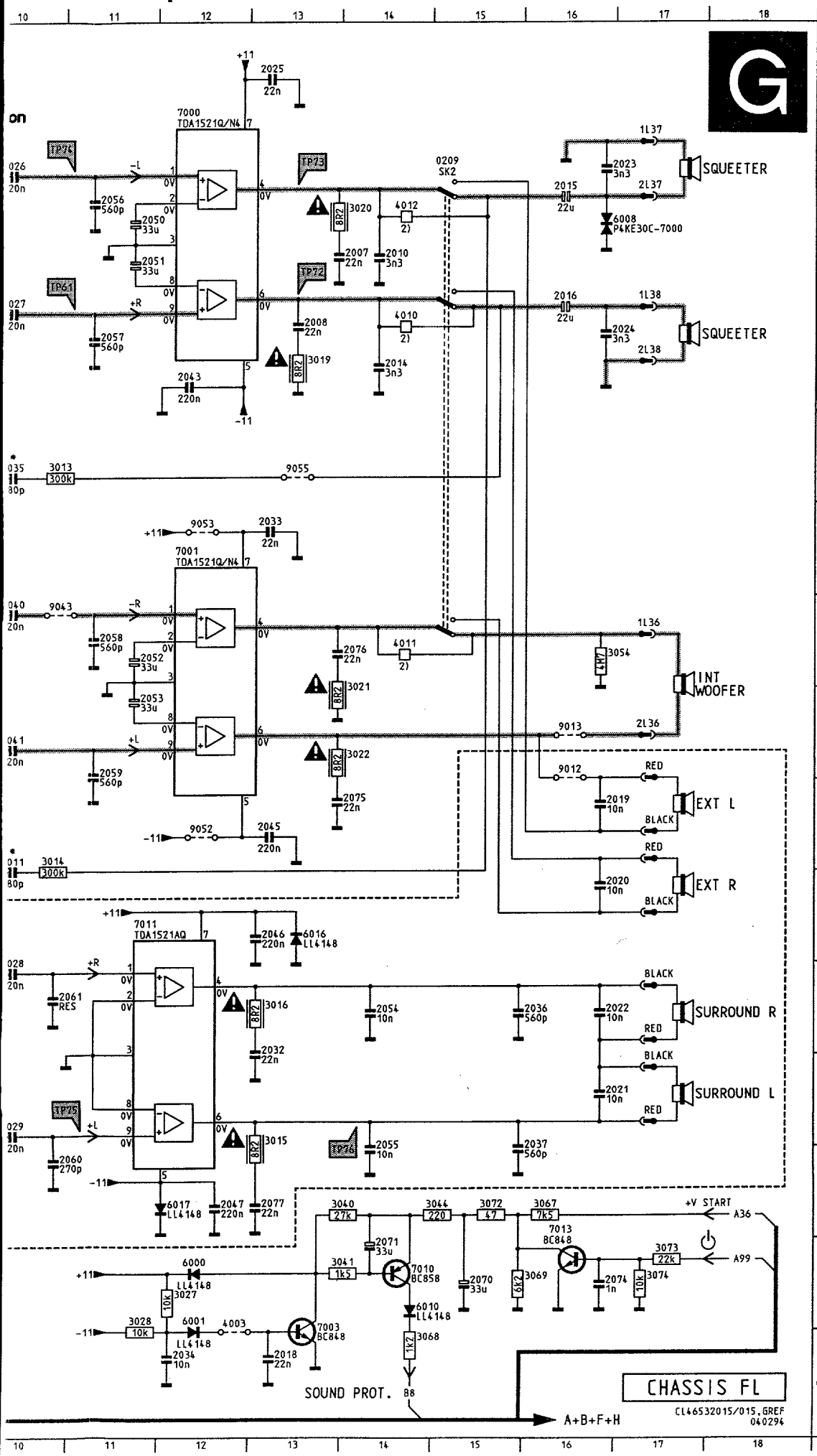

	0209	B15	6011	G 5
	2001	A 3	6012	H 5
	2002	D 3	6016	J13
	2003	A 5	6017	M12
A	2007	C14	6021	F 5
	2008	D13	7000	A12
	2009	D 5	7001	F12
	2010	C14	7002	F 7
	2011	I10	7003	O13
	2012	I 7	7005	G 5
	2013	F 7	7006	H 5
	2014	D14	7007	H 3
B	2015	B16	7008	G 4
	2016	C16	7009	A 3
	2018	O13	7010	N14
	2019	I16	7011	J11
	2020	J16	7012	H 3
	2021	L16	7013	M16
	2022	K16	9012	H16
	2023	B16	9013	H16
C	2024	D16	9034	H 9
	2025	A13	9043	G10
	2026	B10	9052	I12
	2027	C10	9053	F12
	2028	K10	9055	E13
	2029	L10		
	2030	J 7		
D	2031	E 7		
	2032	K13		
	2033	F13		
	2034	O12		
	2035	E10		
	2036	K16		
	2037	M16		
	2038	I 2		
E	2040	G10		
	2041	H10		
	2043	D12		
	2045	I13		
	2046	J13		
	2047	M12		
	2050	B11		
	2051	C11		
F	2052	G11		
	2053	H11		
	2054	K14		
	2055	M14		
	2056	B11		
	2057	D11		
	2058	G11		
G	2059	H11		
	2060	M10		
	2061	K10		
	2065	B 5		
	2066	C 5		
	2070	N15		
	2071	N14		
	2072	F 5		
H	2073	I 2		
	2074	N16		
	2075	I14		
	2076	G14		
	2077	M13		
	3000	B 5		
	3001	C 5		
I	3004	G 6		
	3005	H 6		
	3006	J 7		
	3009	E 7		
	3011	G 9		
	3012	H 9		
	3013	E10		
	3014	I10		
J	3015	L13		
	3016	K13		
	3019	D13		
	3020	B14		
	3021	G14		
	3022	H14		
	3027	N12		
K	3028	N11		
	3029	G 5		
	3030	I 5		
	3031	G 5		
	3032	H 5		
	3033	H 3		
	3034	F 4		
	3035	G 4		
L	3036	H 2		
	3037	I 3		
	3040	M14		
	3041	N14		
	3043	B 7		
	3044	M15		
	3049	C 2		
M	3050	B 2		
	3051	A 5		
	3052	D 4		
	3053	E 3		
	3054	G16		
	3060	K 8		
	3065	B 6		
	3066	D 6		
N	3067	M16		
	3068	O14		
	3069	N16		
	3072	M15		
	3073	N17		
	3074	N17		
	4003	N12		
	4004	G 9		
O	4007	K 8		
	6000	N12		
	6001	N12		
	6008	B16		
	6010	N14		

Large signal panel FLx.26/.27 /

L01	F1	2238	D4	3609	C5	3369	H4	3537	F2	5262	E3	7000	C5	9008	B5	9236	F1	9601	E1
L02	E1	2240	D4	3011	C5	3370	H4	3538	D3	5308	H5	7001	D5	9010	C5	9237	F1	9614	E2
L03	A1	2241	B4	3012	C5	3371	H4	3539	D1	5310	H5	7002	C5	9012	A4	9238	G3	9615	B2
L08	C4	2242	B4	3013	D4	3372	H4	3540	C4	5381	E3	7003	A5	9013	A4	9239	B4		
L13	C4	2250	F3	3014	D4	3374	H4	3541	C4	5503	B1	7005	D5	9015	B4	9240	B4		
L27	B3	2254	F2	3016	B5	3375	H4	3542	C4	5504	C1	7006	D5	9017	B5	9241	E3		
L28	G1	2255	F3	3019	B5	3376	E3	3543	C4	5506	C1	7007	D5	9020	D5	9242	G2		
L30	A1	2258	F3	3020	B5	3378	H4	3544	C4	5510	D1	7008	D5	9022	A3	9243	E3		
L31	E2	2259	F3	3021	B5	3380	E3	3545	E2	5511	D3	7009	G1	9023	A4	9244	B4		
L33	G2	2260	E3	3022	B5	3381	E3	3546	C4	5514	F2	7010	A5	9024	A4	9246	E1		
L34	G2	2261	E3	3027	A5	3382	E3	3547	C2	5520	E2	7011	B5	9025	A5	9250	F2		
L35	G3	2262	E3	3028	A5	3383	E3	3548	D2	5521	E1	7012	D4	9026	A4	9251	F2		
L36	A2	2263	E2	3029	D5	3385	E3	3549	D2	5522	E2	7013	A5	9027	A5	9300	H5		
L37	A3	2270	G1	3030	D5	3402	A2	3550	B4	5524	D1	7201	F3	9028	A5	9302	H4		
L38	A2	2272	G2	3031	D5	3403	A2	3553	B4	5525	C4	7216	G5	9029	B5	9385	E2		
L39	F3	2302	H5	3032	D5	3404	B2	3554	B4	5526	E1	7241	B4	9031	C4	9400	C1		
L40	E3	2303	H5	3033	D4	3405	B3	3555	B3	5527	C1	7242	B4	9032	C5	9401	B2		
L61	G2	2308	H5	3034	D4	3406	B3	3556	B3	5528	C2	7246	E1	9033	C5	9402	B3		
L62	E5	2321	H5	3035	D5	3407	B3	3557	C4	5534	D3	7250	F3	9034	C5	9405	A1		
L65	G2	2331	H4	3036	D4	3408	B3	3558	B3	5536	D3	7251	F3	9035	A4	9406	B2		
L67	D4	2351	H4	3037	D4	3409	B3	3559	B4	5543	D4	7268	F2	9036	A4	9407	B2		
L68	C3	2360	H4	3040	A5	3410	B3	3560	C3	5548	D1	7270	F2	9037	B3	9450	B1		
L69	A2	2361	H4	3041	A5	3411	B2	3561	C3	5555	D3	7272	G2	9038	B3	9451	A1		
L80	G4	2365	H4	3042	A5	3412	B3	3562	B4	6000	A5	7273	F2	9039	B1	9453	B2		
L87	B2	2372	H4	3043	C4	3413	B3	3563	B4	6001	A5	7274	G1	9041	C4	9454	B2		
SK1	G3	2374	H4	3044	A5	3414	B3	3600	B2	6008	A3	7305	H5	9042	C4	9456	B2		
SK2	B3	2376	H4	3049	G1	3415	B3	3601	C2	6010	A5	7311	H5	9043	D5	9457	A1		
0207	A4	2380	E3	3050	G1	3416	B3	3602	B2	6011	D5	7312	H5	9045	D4	9459	A3		
0211	A3	2381	E3	3051	G1	3417	B3	3603	B2	6012	D5	7318	H5	9046	D4	9460	B2		
039	H5	2382	E3	3052	G1	3418	B3	3604	B2	6016	B5	7320	H4	9047	E5	9461	B3		
040	H4	2386	E3	3053	G1	3419	B3	3605	C3	6017	E4	7321	F3	9048	D4	9462	C4		
1200	G3	2401	B3	3054	A2	3420	B3	3606	B2	6021	D4	7360	H4	9050	A3	9468	B3		
2001	G1	2402	A2	3060	B5	3421	B3	3607	B2	6201	F3	7369	H4	9051	D4	9471	B2		
2002	G1	2403	A2	3061	B5	3422	B3	3608	F1	6210	G3	7370	H4	9052	D4	9472	A2		
2003	G1	2404	A2	3065	C4	3423	B3	3609	F1	6211	F3	7371	H4	9053	D5	9473	B2		
2004	G1	2405	A2	3066	C5	3424	B2	3610	F1	6212	F4	7380	E3	9054	D4	9500	D2		
2005	G1	2406	B3	3067	A4	3425	B3	3611	F1	6213	F4	7381	E3	9055	A4	9501	D2		
2007	B5	2407	B2	3068	A4	3426	A2	3612	E1	6216	F5	7384	E3	9056	A4	9504	D2		
2008	B5	2408	C3	3069	A4	3427	B3	3614	F1	6220	G4	7400	B3	9057	C5	9505	C1		
2009	G1	2409	B2	3072	A5	3428	C3	3615	F1	6221	G5	7402	C3	9058	G2	9506	D1		
2010	A4	2410	B2	3073	F5	3429	B3	3616	F1	6230	E4	7403	A1	9059	G1	9507	C2		
2011	D5	2411	B2	3074	A5	3430	B3	3617	F1	6231	E4	7407	B3	9060	G1	9508	B2		
2012	C5	2412	C3	3201	H3	3431	B3	3618	B2	6232	E4	7417	B3	9063	B5	9510	D2		
2013	C5	2415	A3	3202	F5	3437	A1	3619	F1	6233	E4	7444	B2	9064	B5	9511	C2		
2014	A3	2416	B3	3203	H2	3438	B2	3620	F1	6235	D3	7445	B2	9065	B4	9513	D1		
2015	A3	2417	B3	3204	H1	3439	B3	3621	E1	6237	E3	7450	A1	9066	B5	9521	E1		
2016	A3	2418	A3	3205	G1	3440	B1	3622	E1	6238	E3	7451	A1	9067	A3	9522	E1		
2018	A5	2419	A2	3206	G1	3441	B3	3623	E1	6247	B4	7469	B2	9068	G3	9524	D1		
2019	A4	2450	A1	3209	G1	3442	B3	3624	E1	6251	F3	7480	F2	9200	E5	9530	B2		
2020	A4	2451	B1	3210	F3	3443	C3	3625	E1	6260	E3	7481	E2	9201	F5	9533	C2		
2021	A4	2452	B1	3211	G3	3444	B2	3626	B2	6262	E3	7501	B2	9202	D3	9534	C2		
2022	A4	2454	A2	3212	F3	3446	B2	3627	A1	6266	F2	7504	D1	9203	D4	9535	C3		
2023	A3	2455	B1	3213	F3	3450	A1	3628	A1	6272	G2	7506	D1	9204	G2	9537	C3		
2024	A3	2456	A2	3214	E5	3451	A1	3629	B2	6280	C4	7512	C3	9205	H1	9539	C3		
2025	C5	2457	A2	3215	E5	3452	B1	3630	A2	6302	H5	7513	C3	9206	H1	9541	D2		
2026	B5	2458	B1	3216	F4	3455	A1	3631	A2	6303	H5	7530	F1	9207	G1	9542	C2		
2027	C5	2459	B1	3220	G4	3456	A2	3632	C3	6304	H5	7540	C4	9216	G2	9543	C2		
2028	B5	2460	B1	3230	F3	3457	A2	3633	A2	6305	H5	7541	C4	9217	G2	9544	D1		
2029	B5	2480	E2	3234	B4	3458	A1	3634	A1	6306	F3	7542	C4	9218	H1	9545	C1		
2030	C5	2502	B2	3235	B4	3459	A1	4000	A5	6308	H5	7543	D2	9219	E3	9547	D1		
2031	C5	2503	B2	3236	B4	3460	B1	4001	D5	6312	H5	7550	D3	9220	G4	9548	D1		
2032	B5	2504	D1	3237	C4	3461	A1	4002	B5	6314	H5	7551	B4	9221	G3	9549	E1		
2033	D5	2505	D1	3238	C4	3462	A1	4003	A5	6315	H5	7552	B4	9222	F3	9550	C1		
2034	A5	2509	D2	3239	D3	3463	A1	4004	C5	6318	H5	7601	F1	9223	F4	9551	C1		
2035	C5	2511	C2	3240	E3	3464	A1	4005	C5	6319	H5	7602	F1	9224	F5	9552	F1		
2036	A4	2512	C3	3241	B4	3465	A2	4006	D5	6321	F3	7603	F1	9225	E3	9556	C1		
2037	A4	2513	C3	3243	B4	3466	A1	4007	C5	6331	H4	7608	F1	9228	E4	9557	E2		
2038	D4	2517	C3	3245	B4	3467	B2	4010	A3	6349	H4	7610	E1	9229	E5	9560	D3		
2039	A4	2518	C3	3246	E1	3468	A1	4011	B3	6350	H4	7616	A1	9230	F3	9561	D3		
2040	D5	2519	E2	3247	B4	3469	A1	4012	A3	6351	H4	7618	A2	9231	E5	9562	C3		
2041	D5	2520	D2	3248	B4	3470	A1	4019	E3	6352	E3	9000	A4	9232	E4	9563	C3		
2042	C5	2521	D1	3249	F3	3471	A1	4039	B1	6353	E3	9001	C5	9233	F2	9565	B4		
2043	C5	2522	D1	3250	F3	3473	B1	4274	G2	6355	H4	9002	A3	9234	F1	9566	D3		
2044	D5	2523	C1	3251	F3	3474	A2	4400	B1	6356	H4	9003	A4	9235	E4	9567	D3		
2045	D5	2524	D1	3252	F3	3479	F2	4410	B2	6357	H4								
2046	B5	2526	C1	3253	F2	3480	B1	4411	B2	6370	H4								
2047	B5	2527	C1	3255	F3	3481	F2	4412	B2	6371	H4								
2048	B1	2528	C1	3266	F2	3482	F2	4413	B3	6372	E3								
2049	A4	2529	F1	3267	F2	3483	B3	4415	E2	6373	E3								
2050	C5	2530	F1	3268	G2	3484	B3	4416	B2	6375	E3								
2051	C5	2531	D3	3270	F2	3485	E2	4417	B2	6376	E3								
2052	D5	2533	D3	3271	F2	3490	B3	4420	A2	6402	B3								
2053	D5	2534	D3	3272	F2	3500	B2	4421	B2	6403	C3								
2054	B5	2535	C4	3273	G2	3501	B2	4465	A1	6404	C3								
2055	B5	2536	D3	3274	G1	3502	B1	4466	A1	6405	B1								
2056	C5	2537	D3	3275	G2	3503	B1	4467	A1	6417	B3								
2057	C5	2541	D4	3298	F5	3504	D1	4468	B2	6440	B3								
2058	D5	2542	C4	3299	F5	3505	D1	4469	A1	6441	B3								
2059	D5	2543	C4	3300	H5	3506	C1	4507	D4	6451	B1								
2060	B5	2545	C4	3304	H5	3507	D1	4517	B3	6452	B1								
2061	B5	2546	D2	3305	H5	3508	C2	4518	B4	6453	B1								
2065	C4	2547	C2	3306	F3	3509	C2	4519	C3	6465	A1								
2066	D5	2552	B4	3308	H5	3510	D1	4521	C4	6466	A1								
2070	A4	2553	B4	3309	H5	3512	C3	4522	C4	6467	A1								
2071	A5	2554	D4	3310	H5	3513	C3	4524	C4	6480	F1								
2072	D4	2555	B3	3311	H5	3514	F2	4525	C4	6481	F1								
2073	D4	2556	B4	3312	H5	3515	C2	4527	D3	6504	D1								
2074	A5	2600	F1	3313	H5	3516	C2	4528	D4	6506	C1								
2200	H3	2601	B2	3314	H5	3517	C2	4529	D4	6507	B4								
2202	G2	2603	C2	3317	H5	3518	E2	4530	D2	6515	C3								
2203	H2	2604	B2	3320	H5	3519	E2	4531	D2	6516	C3								
2210	F4	2605	F1	3321	H5	3520	E2	4533	C2	6517	C3								
2211	F4	2606	C3	3322	H5	3521	E2	4534	C3	6519	E2								
2214	G4	2607	B3	3331	H4	3522	E2	4535	C1	6520	E2								
2215	G4	2609	F1	3332	H4	3524	D1	4536	C1	6526	C1								
2216	G5	2610	F1	3350	H4	3525	C4	4537	C3	6527	C1								
2218	F5	2611	F1	3351	H4	3526	C1	4538	C3	6529	F1								
2219	F5	2613	F1	3356	H4	3527	F1	5204	H2	6535	D3								
2230	B4	2614	F1	3357	H4	3528	D3	5230	F4	6536	C3								
2231	E4	2626	A2	3358	H4	3529	F1	5231	E5	6538	B2								
2232	E5	3000	D4	3360	H4	3530	F2	5233	E4	6542	C4								
2233	E4	3001	D5	3362	H4	3532	C3	5235	E4	6546	C2								
2234	E5	3004	C5	3364	H4	3533	C3	5237	E3	6547	D3								
2235	D3	3005	D5	3365	H4	3534	D3	5241	C4	6551	B4								
2236	D4	3006	C5	3366	H4	3535	D3	5255	F3	6601	E1								
2237	E3	3008	C5	3368	H4	3536	D3	5260	E3	6629	B2								

Mains filter FL4

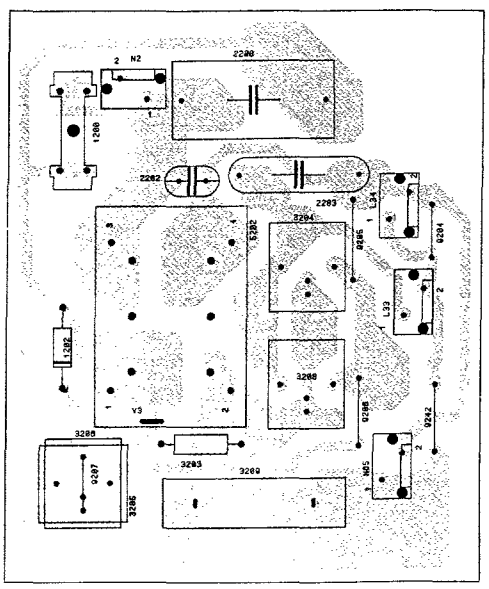

Groß-signal Platte FLx.26/.27

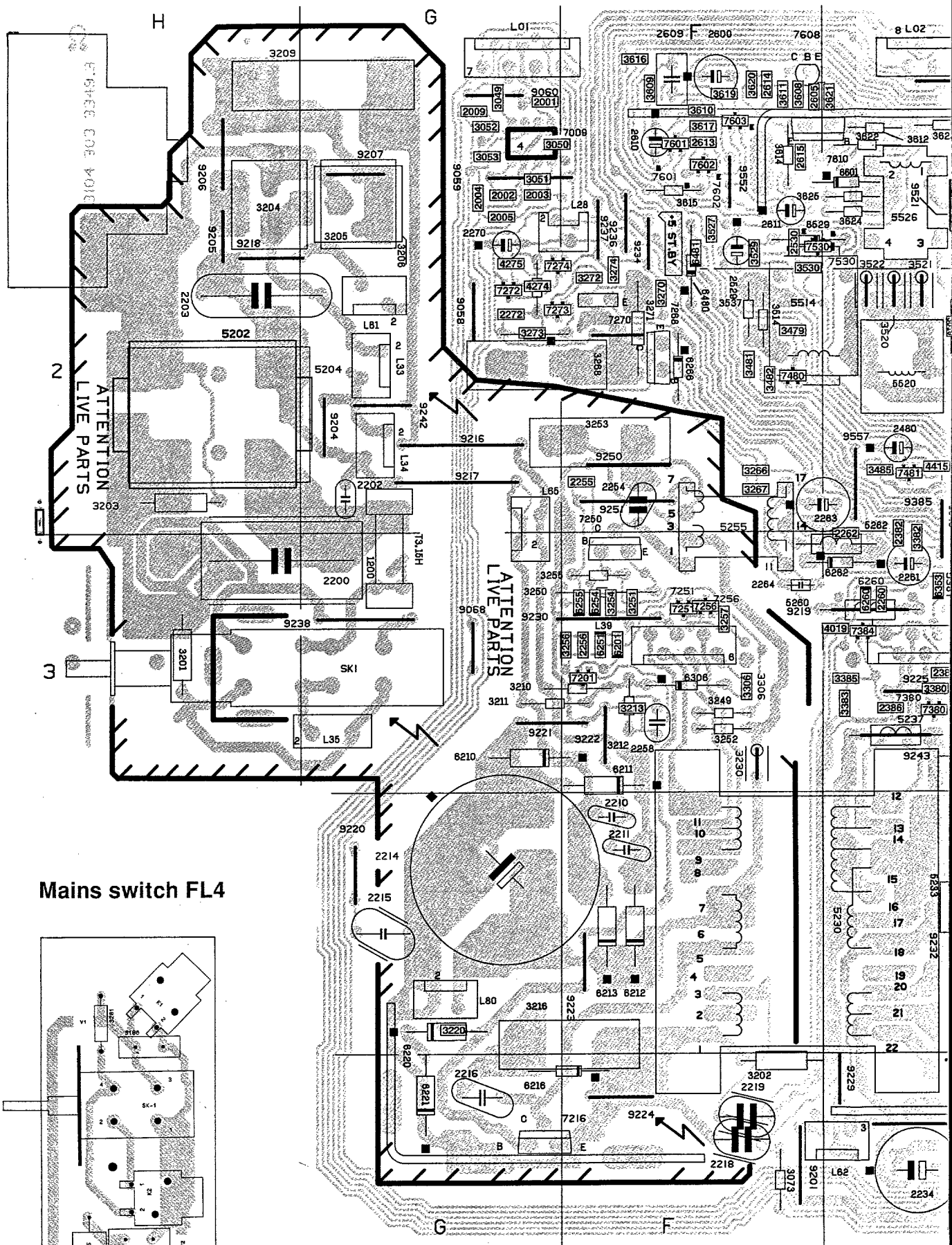

Mains switch FL4

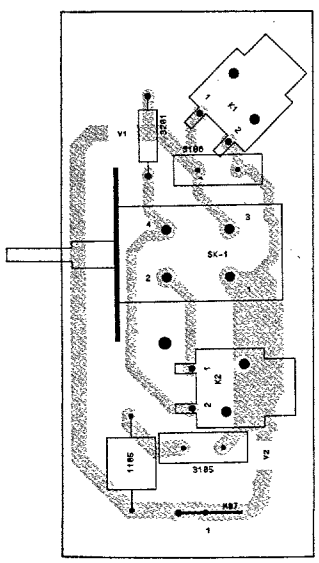

Platine forts signeaux FLx.26/.27

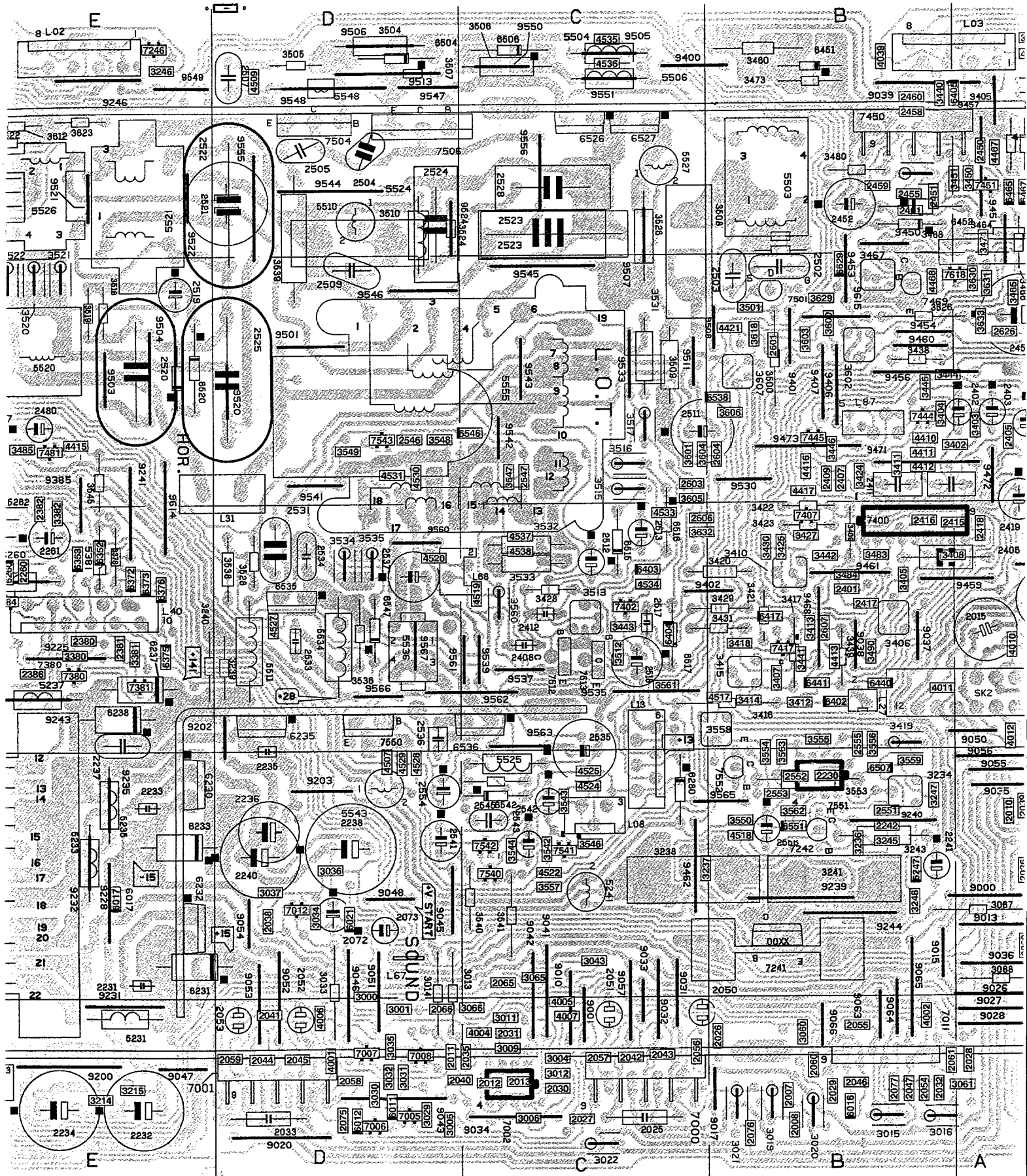

gneaux FLx.26/.27

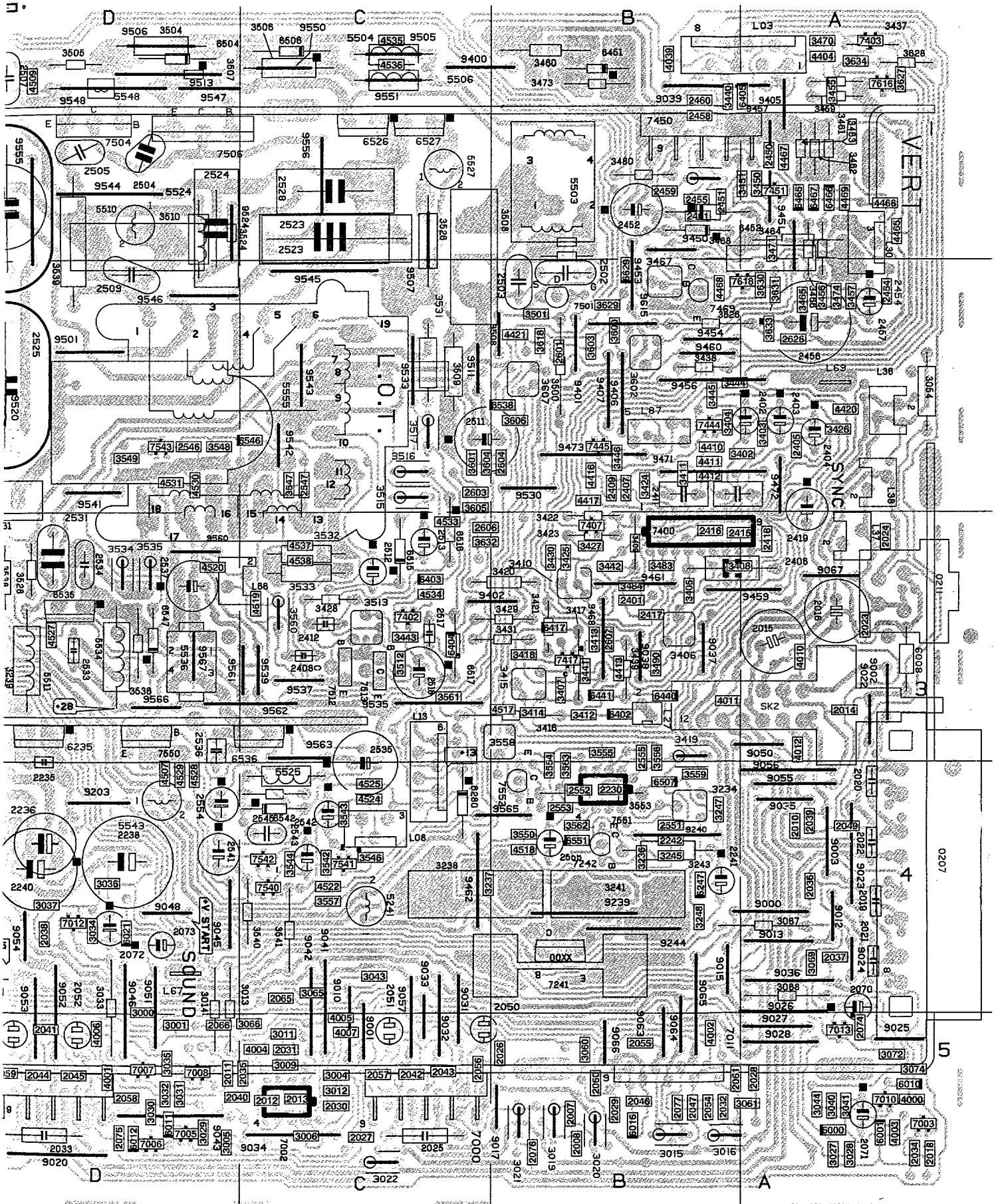

L01	F1	2259	F3	3011	C5	3375	H4	3553	E2	5526	E1	7273	F2	9238	G3	9520	E2
L02	E1	2260	E3	3012	C5	3376	E3	3555	D1	5527	C1	7274	F1	9239	E3	9521	D1
L03	A1	2261	E3	3013	D4	3378	H4	3556	C1	5534	D3	7305	H5	9240	B4	9522	E2
L06	C2	2262	E3	3014	D4	3380	E3	3558	C2	5543	D4	7311	H5	9241	E3	9529	D3
L13	C4	2263	E2	3016	B5	3381	E3	3559	B2	5555	D3	7312	H5	9242	G2	9530	B2
L30	A1	2270	G1	3019	B5	3382	E3	3560	C4	6000	A5	7318	H5	9243	E3	9533	C2
L32	E2	2272	G2	3020	B5	3383	E3	3561	C4	6001	A5	7320	H4	9246	E1	9534	C2
L33	G2	2302	H5	3021	B5	3387	E3	3562	D4	6008	A3	7360	H4	9247	F1	9535	C3
L34	G2	2303	H5	3022	B5	3402	B2	3563	C4	6010	A5	7369	H4	9250	F2	9537	C3
L35	G3	2308	H5	3027	A5	3403	B2	3564	D3	6011	D5	7370	H4	9251	F2	9538	D3
L36	A2	2321	H5	3028	A5	3404	A2	3570	C4	6012	D5	7371	H4	9300	H5	9539	D3
L37	A3	2330	B4	3029	D5	3405	B3	3573	D1	6016	B5	7380	E3	9302	H4	9540	D4
L38	A2	2331	H4	3030	D5	3406	B3	3601	B2	6017	D4	7381	E3	9385	E2	9541	D2
L39	F3	2351	H4	3031	D5	3407	B3	3602	B2	6021	D4	7384	E3	9400	D3	9542	C2
L40	E3	2360	H4	3032	D5	3408	B3	3603	B2	6201	F3	7400	B3	9437	B3	9543	C2
L61	G2	2361	H4	3033	D4	3409	B2	3604	B2	6210	G3	7402	C3	9438	B3	9544	D1
L65	G2	2365	H4	3034	D4	3410	B3	3605	C2	6211	F3	7417	B3	9439	B3	9545	C1
L70	A2	2372	H4	3035	D5	3411	B2	3606	B2	6212	F4	7443	A2	9450	A1	9547	D1
L71	B2	2374	H4	3036	D4	3413	B3	3607	B2	6213	F4	7444	A2	9451	A2	9549	E1
L80	G4	2376	H4	3037	D4	3414	B3	3608	F1	6216	F5	7450	A1	9452	B2	9550	D4
L90	C3	2380	E3	3040	A5	3415	B3	3609	F1	6220	G4	7451	A1	9453	A1	9552	F1
SK1	G3	2381	E3	3041	A5	3417	B3	3610	F1	6221	G5	7469	B2	9454	C3	9557	E2
SK2	B3	2382	E3	3043	C4	3418	B3	3611	F1	6230	E4	7480	F2	9455	B2	9614	E2
0211	A3	2386	E3	3044	A5	3419	B4	3612	E1	6232	E4	7481	E2	9457	A1	9615	B2
039	H5	2401	B3	3049	G1	3421	B3	3613	B2	6235	D3	7501	B2	9459	B3	9625	A2
040	H4	2402	B2	3050	G1	3422	B2	3614	E1	6237	E3	7506	D1	9460	B2	9626	A2
1200	G3	2403	B2	3051	G1	3424	B2	3615	F1	6238	E3	7512	C3	9462	C4	9801	B4
2001	G1	2404	A2	3052	G1	3426	A2	3616	F1	6246	B4	7513	C3	9463	B3	9802	B4
2002	G1	2405	A2	3053	G1	3428	C3	3617	F1	6251	F3	7530	F1	9464	B4	9803	B3
2003	G1	2406	B3	3054	A2	3429	B3	3618	B2	6260	E3	7540	C4	9471	B2		
2004	G1	2407	B2	3060	B5	3430	B2	3619	F1	6262	E3	7541	C4	9472	A2		
2005	G1	2408	C3	3061	B5	3438	C3	3620	F1	6266	F2	7542	C4	9500	D2		
2007	B5	2409	B2	3065	C4	3439	B2	3621	F1	6272	G2	7543	D2	9501	D2		
2008	B5	2410	B2	3066	C5	3440	B3	3622	E1	6280	C4	7550	D3	9502	D2		
2009	G1	2411	B2	3067	A4	3441	B3	3623	E1	6302	H5	7551	D4	9503	D2		
2010	A4	2412	C3	3068	A4	3442	B3	3625	A2	6303	H5	7552	C4	9504	D2		
2011	D5	2413	C3	3069	A4	3443	A2	3626	A1	6304	H5	7601	F1	9507	C1		
2012	C5	2415	A3	3072	A4	3444	B2	3627	B4	6305	H5	7602	F1	9508	B2		
2013	C5	2416	B3	3073	A5	3448	A2	3628	A1	6306	F3	7603	F1	9511	C2		
2014	A3	2417	B3	3074	A5	3450	B1	3629	B2	6308	H5	7608	F1				
2015	A3	2418	A3	3201	H3	3451	B1	3630	F1	6312	H5	7610	E1				
2016	A3	2419	A3	3202	F5	3452	B1	3631	B2	6314	H5	7616	A1				
2018	A5	2450	A1	3203	H2	3453	A1	3632	B3	6315	H5	7618	B2				
2019	A4	2451	A1	3204	H1	3455	A1	3633	B2	6318	H5	7800	B4				
2020	A4	2452	B1	3205	G1	3456	A2	3634	A1	6319	H5	7801	B3				
2021	A4	2453	A1	3209	G1	3457	A2	3653	B2	6331	H4	7802	B4				
2022	A4	2455	B1	3210	F3	3458	A1	3800	B4	6349	H4	9000	A4				
2023	A3	2456	A2	3211	G3	3459	A1	3801	B4	6350	H4	9001	C5				
2024	A3	2457	A2	3212	F3	3460	B1	3802	B4	6351	H4	9003	A4				
2025	C5	2458	B1	3213	F3	3461	A1	3803	B4	6352	E3	9008	B5				
2026	B5	2459	B1	3214	E5	3462	A1	3804	B4	6353	E3	9010	C5				
2027	C5	2460	B1	3215	E5	3463	A1	3805	B4	6355	H4	9012	A4				
2028	B5	2480	E2	3216	F4	3464	A2	3806	B4	6356	H4	9013	A4				
2029	B5	2501	B2	3235	F3	3465	A2	3807	C3	6357	H4	9015	B4				
2030	C5	2502	B2	3238	D3	3467	B1	3809	B4	6370	H4	9017	B5				
2031	C5	2503	B2	3239	D3	3468	A2	3810	B3	6371	H4	9018	F5				
2032	B5	2504	C1	3240	E3	3473	B1	3811	B4	6372	E3	9019	E3				
2033	D5	2507	D1	3241	B4	3479	F2	4000	A5	6373	E3	9020	D5				
2034	A5	2509	D2	3242	B4	3480	B1	4001	D5	6375	E3	9022	A3				
2035	C5	2510	D2	3243	B4	3481	F2	4002	A3	6376	E3	9023	A4				
2036	A4	2511	B2	3244	B4	3482	F2	4003	A5	6403	C3	9024	A4				
2037	A4	2512	C3	3245	B4	3484	B3	4004	C5	6404	C3	9026	A4				
2038	D4	2513	C3	3246	E1	3485	E2	4005	C5	6417	B3	9027	A5				
2039	A4	2517	C3	3247	B4	3500	B2	4006	D5	6422	B2	9028	A5				
2040	D5	2518	C3	3248	B4	3501	C2	4007	C5	6440	B2	9029	B5				
2041	D5	2519	E2	3249	F3	3502	B1	4010	A3	6441	B3	9031	C4				
2042	C5	2520	E2	3250	F3	3503	B2	4011	B3	6451	B1	9032	C5				
2043	C5	2521	D1	3251	F3	3504	D1	4012	A3	6452	B2	9033	C4				
2044	D5	2522	D2	3252	F3	3505	C3	4061	B5	6480	F1	9034	C5				
2045	D5	2523	C1	3253	F2	3506	C1	4074	A5	6506	D1	9035	A4				
2046	B5	2524	D1	3255	F3	3507	D1	4268	F2	6515	C2	9036	A4				
2047	B5	2525	E2	3266	F2	3508	C2	4274	F1	6516	C3	9041	C4				
2049	A4	2526	E2	3267	F2	3509	C2	4401	B4	6517	C3	9042	C4				
2050	C5	2527	D1	3268	G2	3510	D1	4402	C4	6519	E2	9043	D5				
2051	C5	2529	F1	3270	F2	3511	D3	4403	B2	6520	E2	9045	D4				
2052	D5	2530	F1	3271	F2	3512	C3	4404	B3	6526	C1	9046	D4				
2053	D5	2531	D3	3272	F2	3513	C3	4405	A1	6527	C1	9047	E5				
2054	B5	2533	D3	3273	G2	3514	F2	4406	B2	6529	F1	9048	D4				
2055	B5	2534	D3	3274	F1	3515	C3	4407	B2	6534	D3	9050	A4				
2056	C5	2535	C4	3275	G2	3516	C3	4408	B4	6536	C3	9051	D4				
2057	C5	2536	C4	3298	F5	3517	C3	4409	B4	6542	C3	9052	D5				
2058	D5	2537	D4	3299	F5	3518	D2	4461	B2	6546	C2	9053	D5				
2059	D5	2541	C4	3300	H5	3519	E2	4508	B2	6547	D3	9054	D4				
2060	B5	2542	C4	3304	H5	3520	E2	4511	F1	6551	C4	9055	A4				
2061	B5	2543	C4	3305	H5	3521	E2	4512	D4	6570	C4	9056	A3				
2065	C4	2544	C3	3306	F3	3522	C1	4530	D2	6611	B2	9057	C5				
2066	D5	2545	C3	3308	H5	3523	D1	4531	D2	6633	B2	9058	G2				
207	A4	2546	D2	3309	H5	3524	D1	4533	D3	6801	B3	9059	G1				
2070	A5	2547	C2	3310	H5	3525	E2	4601	F1	6802	B4	9060	G1				
2071	A5	2548	D2	3311	H5	3526	B2	4802	B4	6803	B4	9063	B5				
2072	D4	2551	C4	3312	H5	3527	F1	4803	B3	6804	B3	9064	B5				
2073	D4	2560	D4	3313	H5	3528	D3	4804	B3	7000	C5	9065	B4				
2074	A5	2600	F1	3314	H5	3529	F1	5202	H2	7001	D5	9066	B5				
2200	H3	2601	B2	3317	H5	3530	F1	5204	H2	7002	C5	9067	A3				
2202	G2	2603	C2	3320	H5	3531	B3	5230	F4	7003	A5	9202	D3				
2203	H2	2605	F1	3321	H5	3532	C3	5231	E5	7005	D5	9203	D4				
2210	F4	2606	C3	3322	H5	3533	C3	5233	E4	7006	D5	9204	G2				
2211	F4	2607	B3	3331	H4	3534	D3	5235	E4	7007	D5	9205	H1				
2214	G4	2609	F1	3332	H4	3535	D3	5237	E3	7008	D5	9206	H1				
2215	G4	2610	F1	3350	H4	3536	D3	5241	C4	7009	G1	9207	G1				
2216	G5	2611	F1	3351	H4	3537	F2	5255	F3	7010	A5	9218	H1				
2218	F5	2612	E1	3356	H4	3538	D3	5260	E3	7011	B5	9219	E3				
2219	F5	2613	F1	3357	H4	3539	C3	5308	H5	7012	D4	9220	G4				
2231	E4	2614	F1	3358	H4	3540	C4	5310	H5	7013	A5	9221	G3				
2232	E5	2615	F1	3359	H4	3541	C4	5381	E3	7201	F3	9222	F3				
2233	E4	2633	B2	3360	H4	3542	C4	5503	B1	7216	G5	9223	F4				
2234	E5	2801	B4	3362	H4	3543	C4	5505	C1	7241	B4	9224	F5				
2235	D3	2805	B4	3364	H4	3544	C4	5506	C1	7241	C4	9225	E3				
2237	E3	2806	B4	3365	H4	3545	E2	5507	D1	7242	B4	9228	E4				
2238	D4	3000	D5	3366	H4	3546	C4	5510	D1	7243	B4	9229	E5				
2239	B4	3001	D5	3368	H4	3547	C2	5511	D3	7246	E1	9230	F3				
2240	D4	3004	C5	3370	H4	3548	D2	5514	F2	7250	F3	9231	E5				
2250	F3	3005	D5	3371	H4	3549	D2	5520	E2	7251	F3	9232	E4				
2254	F2	3006	C5	3372	H4	3550	C4	5521	E1	7268	F2	9233	F2				
2255	F3	3008	C5	3373	H4	3551	C4	5524	D1	7270	F2	9234	F1				
2258	F3	3009	C5	3374	H4	3552	E2	5525	D3	7272	G1	9235	E4				

Panorama

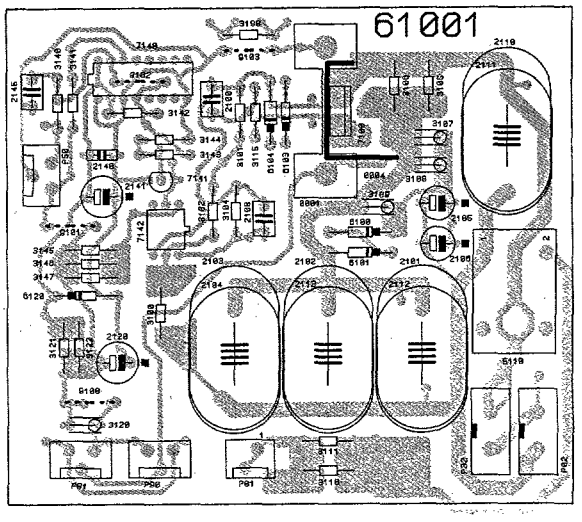

Mains filter FL2

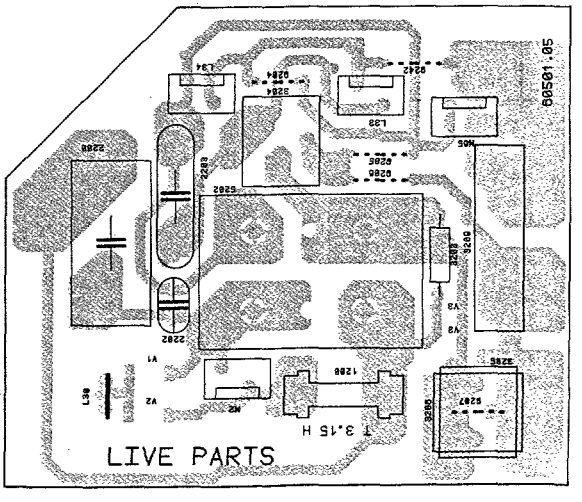

Large signal panel FLx.24 / Groß-signal Platte FLx.24 /

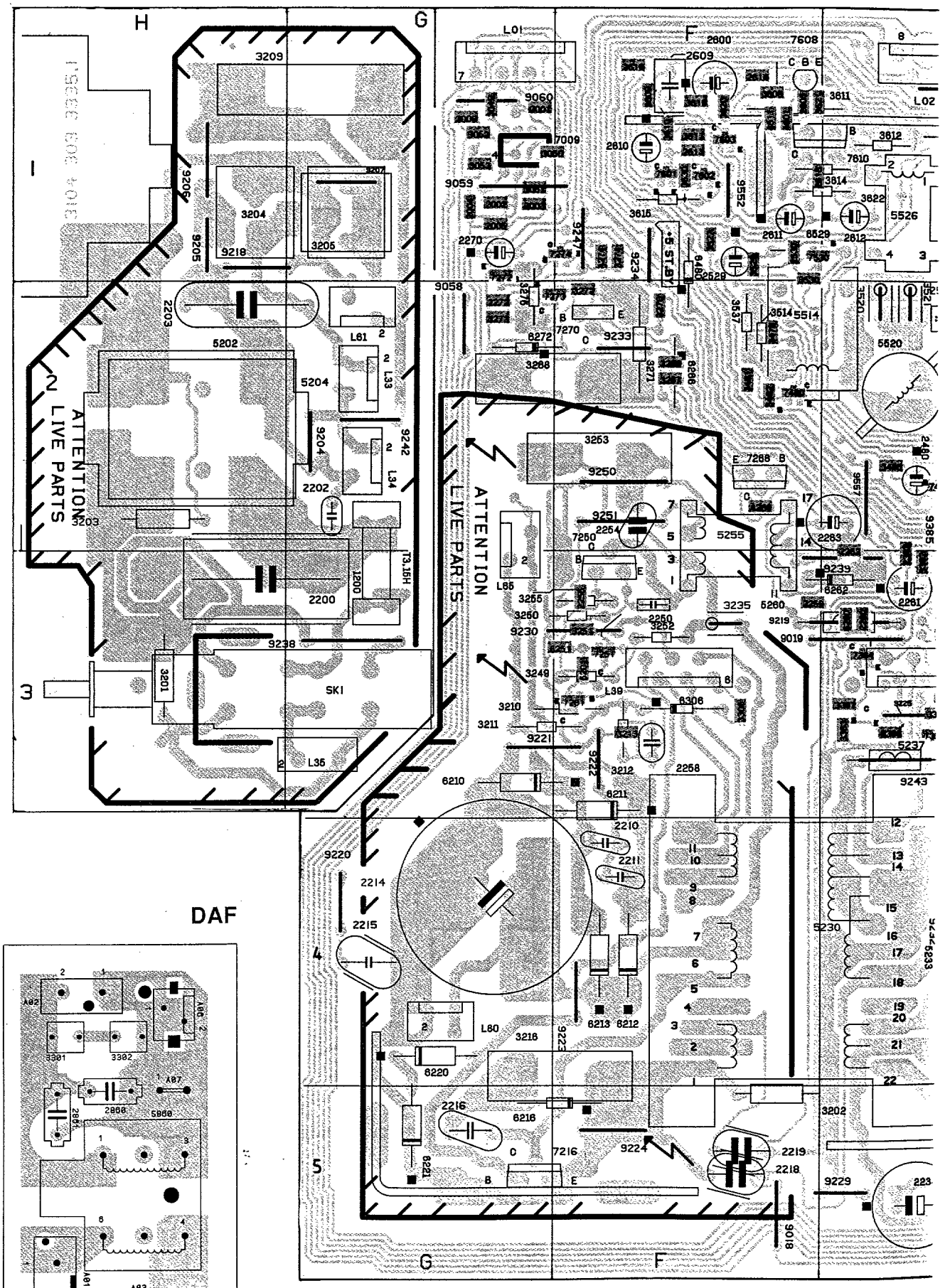

DAF

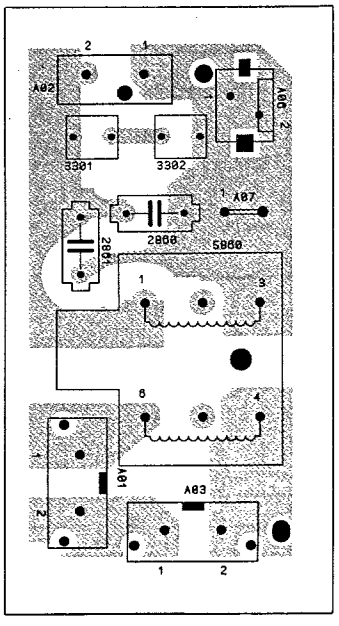

norama

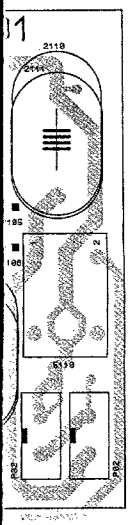

lter FL2

Platine forts signeaux FLx.24

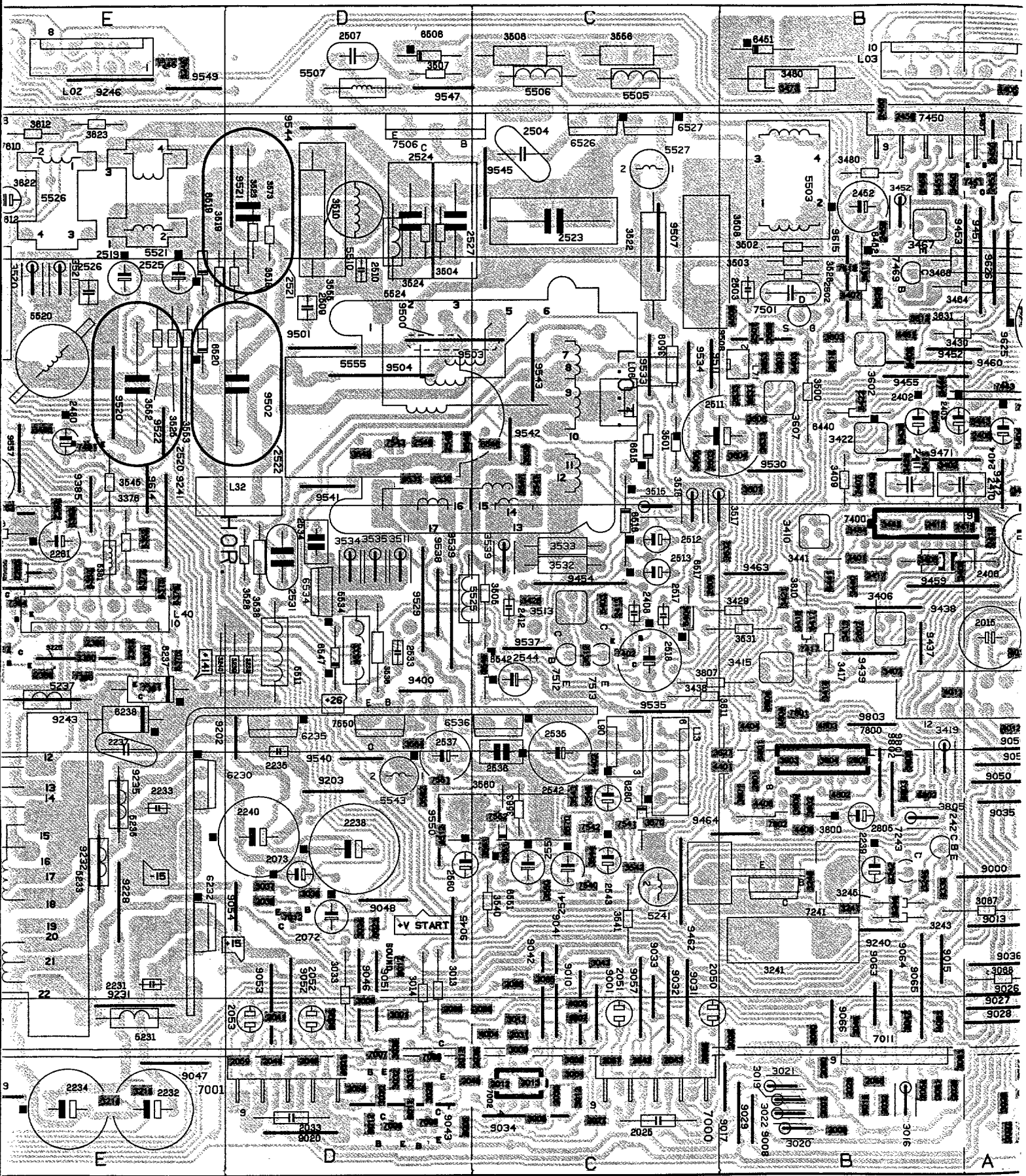

gneaux FLx.24

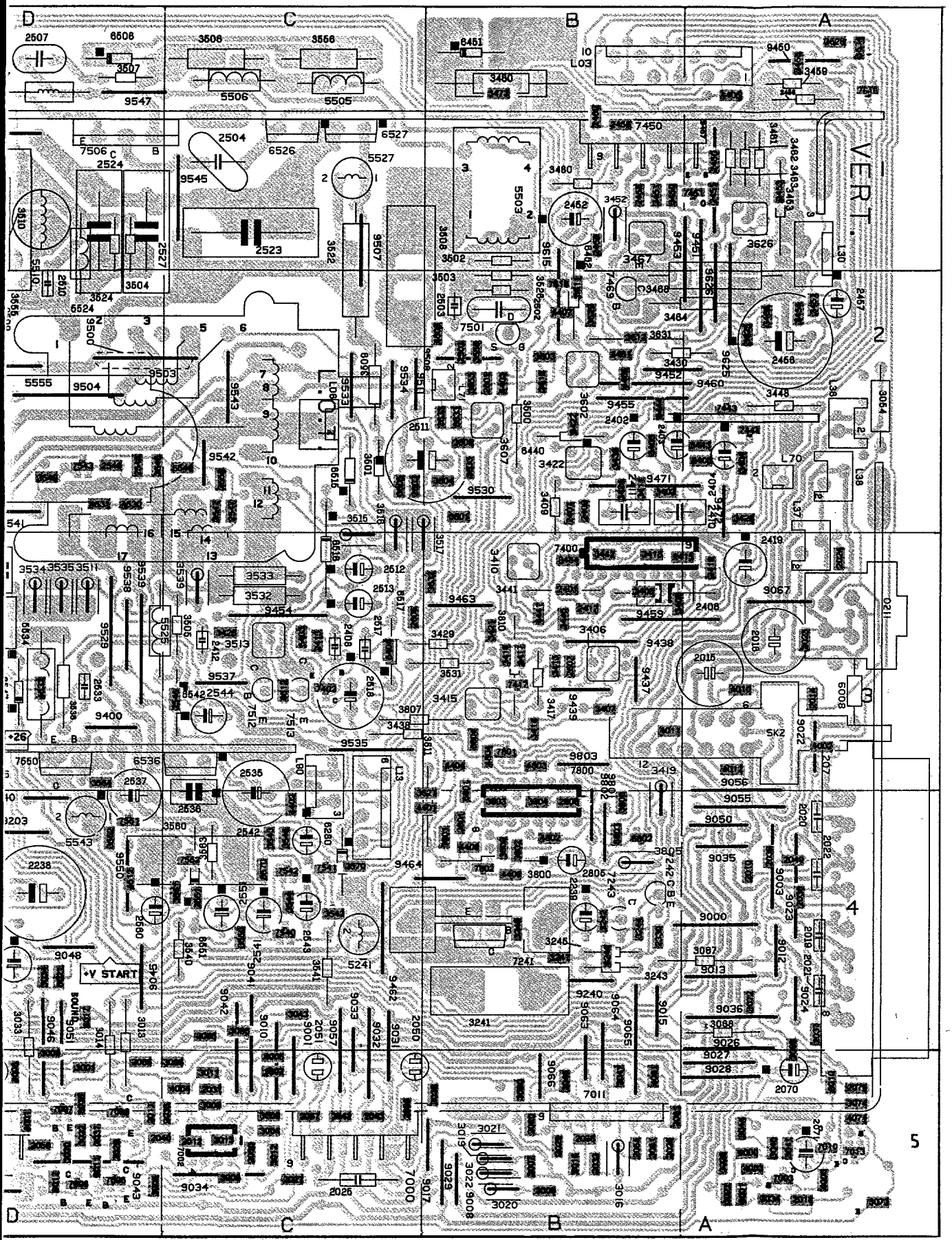

NICAM

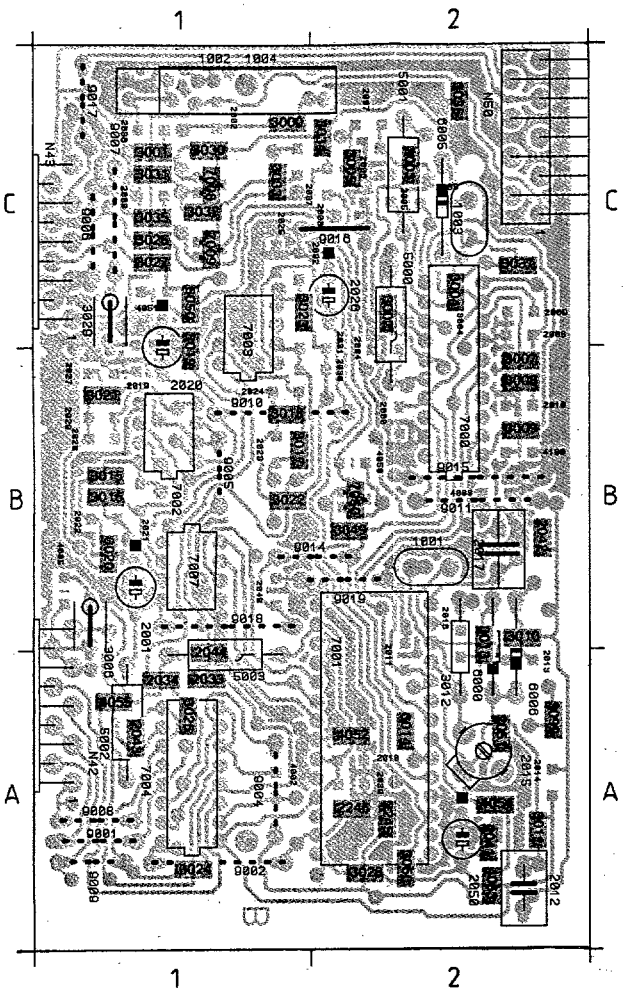

N42	A1	2018	A2	2043	A1	3019	B1	4050	B2	9002	A1				
N43	C1	2019	B1	2044	A1	3020	B1	4051	C1	9004	A1				
N50	C2	2020	B1	2050	A2	3021	B1	4052	A2	9005	B1				
1001	B2	2021	B1	2051	A2	3022	B1	4053	A2	9006	C1				
1002	C1	2022	B1	2245	A2	3023	C1	4054	A2	9007	C1				
1003	C2	2023	B1	2246	A2	3024	A1	4055	A1	9008	A1				
1004	C1	2024	B1	3000	C1	3025	A1	4100	B2	9009	A1				
2000	B2	2025	C1	3001	C1	3026	C1	5000	C2	9010	B1				
2001	B1	2026	C2	3002	C2	3027	C1	5001	C2	9011	B2				
2002	C1	2027	B1	3003	C2	3028	A2	5002	A1	9014	B2				
2003	C2	2028	B1	3004	C2	3029	C1	5003	A1	9015	B2				
2004	B2	2029	B1	3005	C2	3030	C1	6000	A2	9016	C2				
2005	C2	2030	B2	3006	B1	3031	C1	6005	C2	9017	C1				
2006	C2	2031	B2	3007	B2	3032	C1	6006	A2	9018	B1				
2007	C2	2032	C1	3008	B2	3033	C1	6050	C1	9019	B2				
2008	B2	2033	A1	3009	B2	3034	C2	7000	B2						
2009	C2	2034	A1	3010	A2	3035	C1	7001	A2						
2040	B2	2035	C2	3011	A2	3036	C2	7002	B1						
2011	A2	2036	C1	3012	A2	3037	C2	7003	B1						
2012	A2	2037	C1	3013	A2	3049	B2	7004	A1						
2013	A2	2038	C1	3014	A2	3050	A2	7007	B1						
2014	A2	2039	A2	3015	B1	3099	A2	7008	C1						
2015	A2	2040	B1	3016	B1	4002	A1	7009	C1						
2016	A2	2041	A2	3017	B1	4003	B2	7050	B2						
2017	B2	2042	B2	3018	B1	4005	B1	9001	A1						

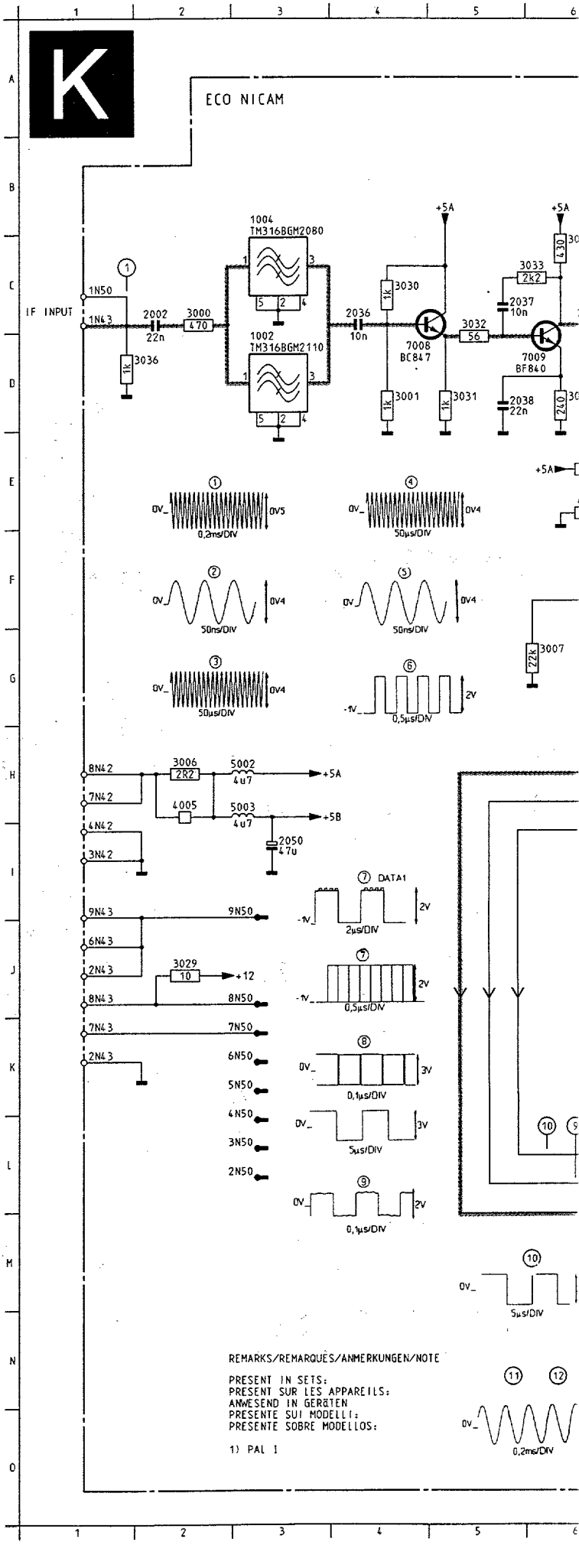

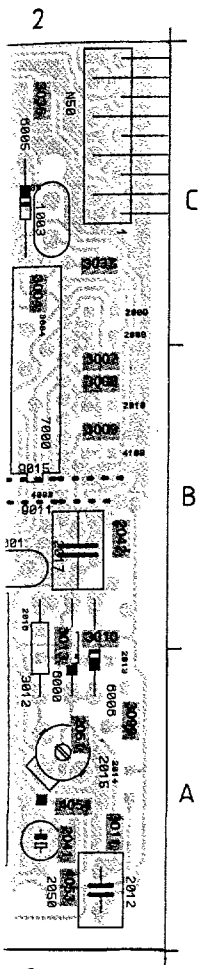

4050 B2
4051 C1
4052 A2
4053 A2
4054 A2
4055 A1
4100 B2
5000 C2
5001 C2
5002 A1
5003 A1
6000 A2
6005 C2
6006 A2
6050 C1
7000 B2
7001 A2
7002 B1
7003 B1
7004 A1
7007 B1
7008 C1
7009 C1
7050 B2
9001 A1
9002 A1
9004 A1
9005 B1
9006 C1
9007 C1
9008 A1
9009 A1
9010 B1
9011 B2
9014 B2
9015 B2
9016 C2
9017 C1
9018 B1
9019 B2

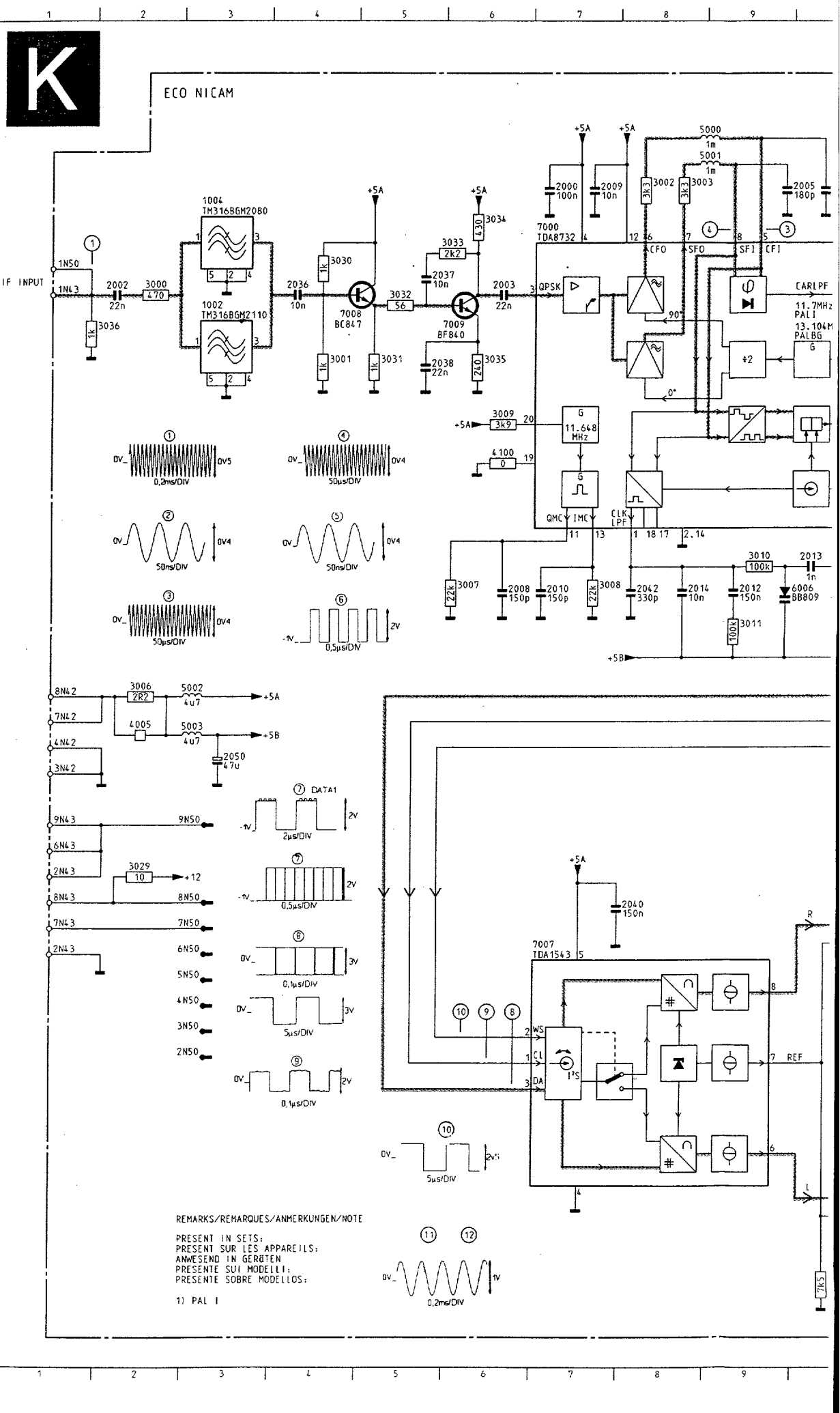

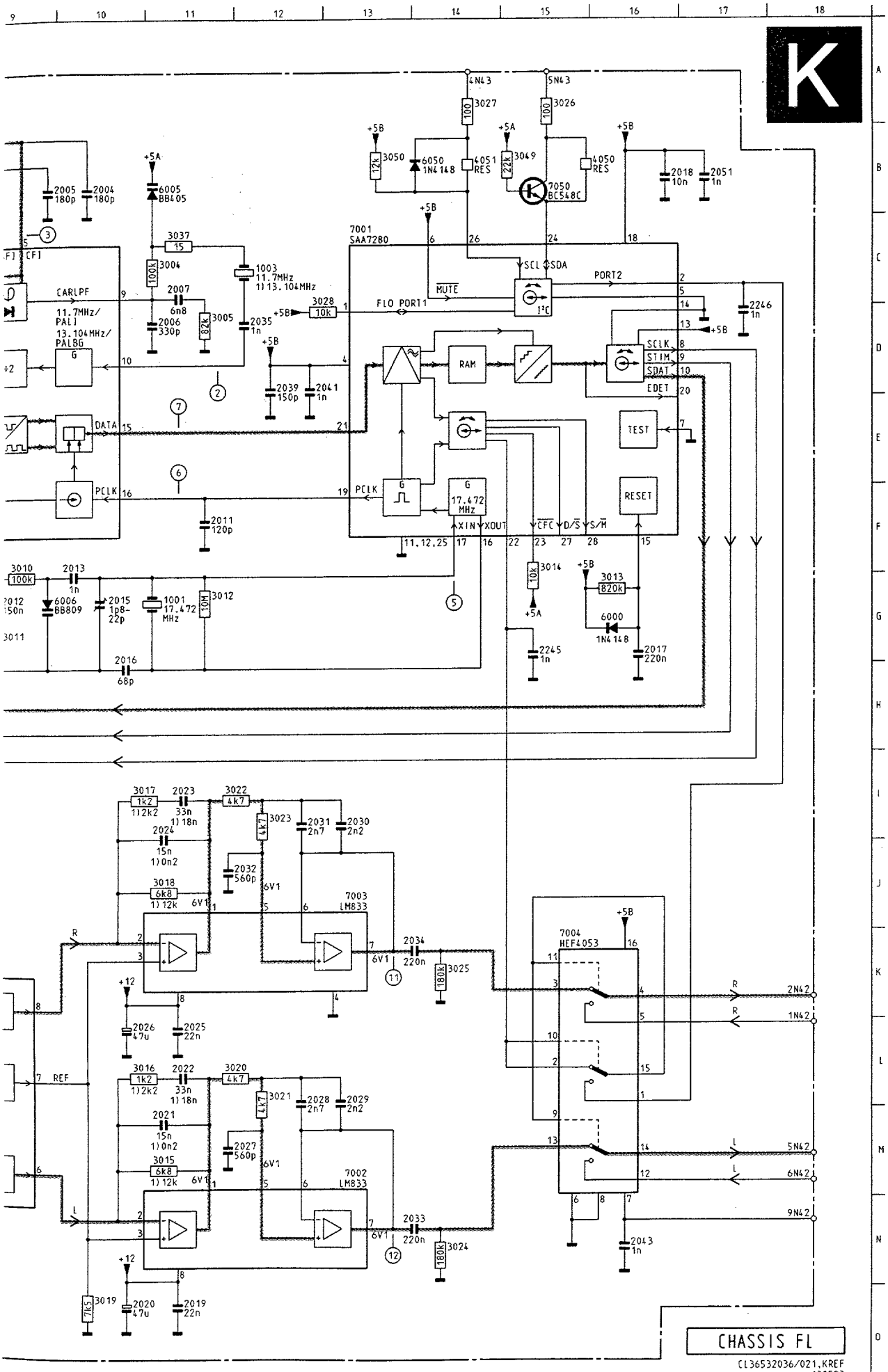

1001	G11	
1002	D 3	
1003	C12	
1004	B 3	
2000	B 7	
2002	C 2	
2003	C 6	
2004	B10	
2005	B 9	
2006	D11	
2007	C11	
2008	G 6	
2009	B 7	
2010	G 7	
2011	F11	
2012	G 9	
2013	F10	
2014	G 8	
2015	G10	
2016	G10	
2017	G16	
2018	B16	
2019	D11	
2020	D10	
2021	M11	
2022	L11	
2023	I11	
2024	I11	
2025	L11	
2026	L10	
2027	M12	
2028	L12	
2029	L13	
2030	I13	
2031	I12	
2032	J12	
2033	N14	
2034	K14	
2035	D12	
2036	C 4	
2037	C 5	
2038	D 5	
2039	D12	
2040	J 8	
2041	D12	
2042	G 8	
2043	N16	
2050	I 3	
2051	B17	
2245	G15	
2246	D17	
3000	C 2	
3001	D 4	
3002	B 8	
3003	B 8	
3004	C11	
3005	D11	
3006	H 2	
3007	G 6	
3008	G 7	
3009	E 6	
3010	F 9	
3011	G 9	
3012	G11	
3013	G16	
3014	F15	
3015	M11	
3016	L10	
3017	I10	
3018	J11	
3019	D10	
3020	L12	
3021	L12	
3022	I12	
3023	I12	
3024	N14	
3025	K14	
3026	A15	
3027	A14	
3028	C13	
3029	J 2	
3030	C 4	
3031	D 5	
3032	C 5	
3033	C 6	
3034	C 6	
3035	D 6	
3036	D 1	
3037	C11	
3049	B15	
3050	B13	
4005	H 2	
4050	B16	
4051	B14	
4100	E 6	
5000	B 9	
5001	B 9	
5002	H 3	
5003	H 3	
6000	G16	
6005	B11	
6006	G 9	
6050	B14	
7000	C 7	
7001	C13	
7002	M13	
7003	J13	
7004	K15	
7007	K 7	
7008	D 5	
7009	D 6	
7050	B15	

P16	C2	21
P17	C4	21
P51	B5	21
P54	A5	21
P56	A1	21
P57	A1	21
1155	A4	21
1201	B4	21
1212	B4	21
1500	B2	21
1600	B5	21
1610	C5	21
2103	B4	21
2105	C4	21
2118	C4	21
2119	C4	21

PIP panel

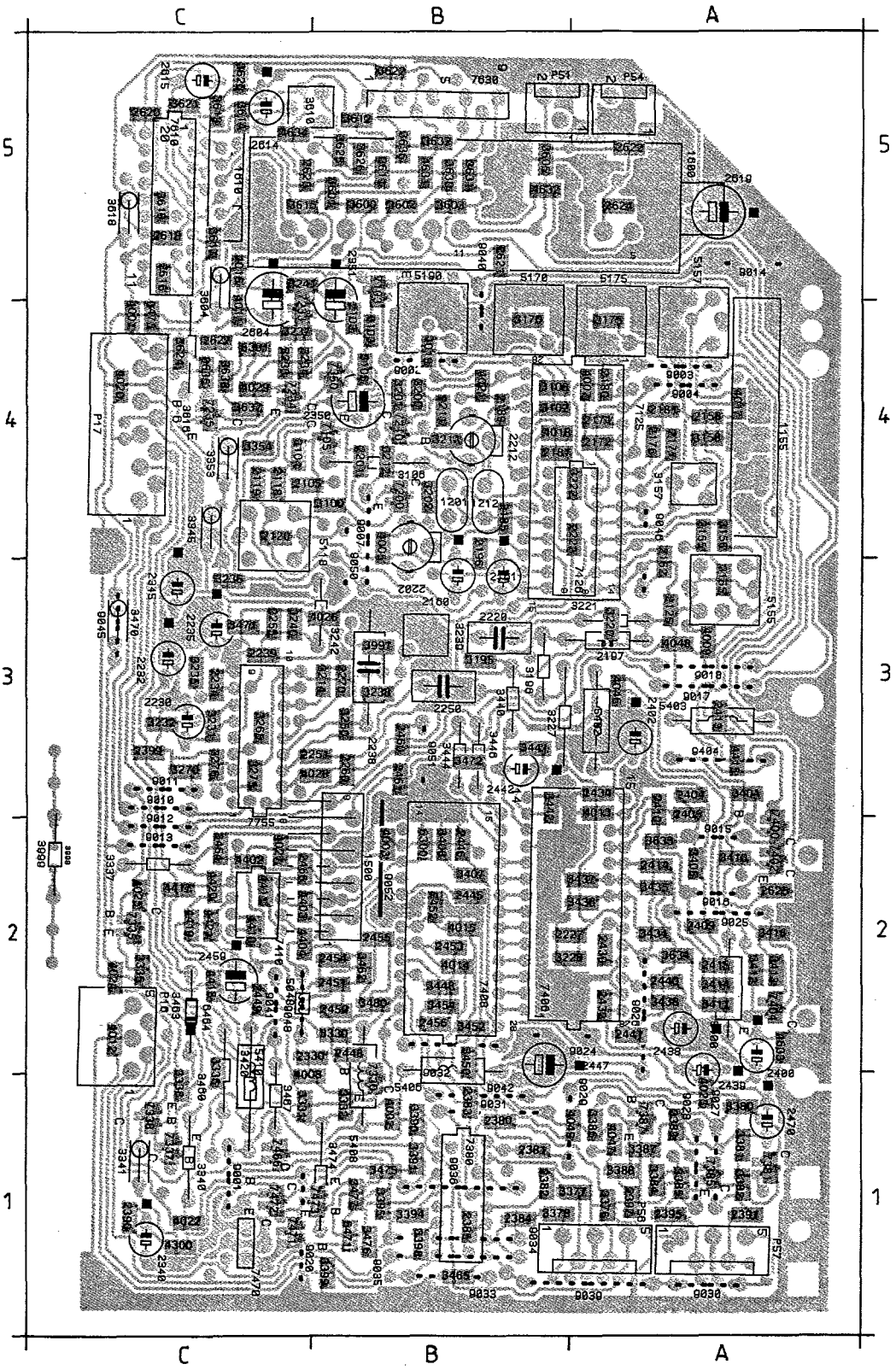

1001	G11														
1002	D 3														
1003	C12														
1004	B 3														
2000	B 7														
2002	C 2														
2003	C 6														
2004	B10														
2005	B 9														
2006	D11														
2007	C11														
2008	G 6														
2009	B 7														
2010	G 7														
2011	F11														
2012	G 9														
2013	F10														
2014	G 8														
2015	G10														
2016	G10														
2017	G16														
2018	B16														
2019	D11														
2020	D10														
2021	M11														
2022	L11														
2023	I11														
2024	I11														
2025	L11														
2026	L10														
2027	M12														
2028	L12														
2029	L13														
2030	I13														
2031	I12														
2032	J12														
2033	N14														
2034	K14														
2035	D12														
2036	C 4														
2037	C 5														
2038	D 5														
2039	D12														
2040	J 8														
2041	D12														
2042	G 8														
2043	N16														
2050	I 3														
2051	B17														
2245	G15														
2246	D17														
3000	C 2														
3001	D 4														
3002	B 8														
3003	B 8														
3004	C11														
3005	D11														
3006	H 2														
3007	G 6														
3008	G 7														
3009	E 6														
3010	F 9														
3011	G 9														
3012	G11														
3013	G16														
3014	F15														
3015	M11														
3016	L10														
3017	I10														
3018	J11														
3019	D10														
3020	L12														
3021	L12														
3022	I12														
3023	I12														
3024	N14														
3025	K14														
3026	A15														
3027	A14														
3028	C13														
3029	J 2														
3030	C 4														
3031	D 5														
3032	C 5														
3033	C 6														
3034	C 6														
3035	D 6														
3036	D 1														
3037	C11														
3049	B15														
3050	B13														
4005	H 2														
4050	B16														
4051	B14														
4100	E 6														
5000	B 9														
5001	B 9														
5002	H 3														
5003	H 3														
6000	G16														
6005	B11														
6006	G 9														
6050	B14														
7000	C 7														
7001	C13														
7002	M13														
7003	J13														
7004	K15														
7007	K 7														
7008	D 5														
7009	D 6														
7050	B15														

P16	C2	2120	C4	2196	B4	2251	C3	2391	A1	2438	A2	2456	B2	2624	A5	3195	B3	3234	C4
P17	C4	2125	A3	2197	A3	2255	C3	2395	A1	2439	A2	2459	C2	2625	A2	3196	B3	3235	C3
P51	B5	2155	A4	2201	B4	2260	B3	2397	A1	2440	A2	2460	B3	2627	C4	3200	B4	3236	C3
P54	A5	2158	A4	2202	B4	2270	B3	2399	C3	2441	A2	2461	B3	3100	B4	3201	B4	3237	C4
P56	A1	2160	B3	2211	B4	2330	C2	2400	A2	2442	B3	2466	C2	3103	B4	3202	B4	3238	B3
P57	A1	2161	B3	2212	B4	2340	C1	2402	A3	2445	B2	2470	A1	3104	C4	3211	B4	3239	B3
1155	A4	2162	A3	2220	B3	2345	C3	2404	A3	2446	B2	2604	C4	3105	B4	3212	B4	3240	C3
1201	B4	2171	A4	2222	B4	2350	B4	2405	A2	2447	B2	2614	C5	3106	B4	3214	B3	3241	C5
1212	B4	2172	A4	2227	B2	2351	B4	2409	A2	2448	B2	2615	C5	3107	B4	3220	A3	3242	B3
1500	B2	2176	A4	2230	C3	2380	B1	2410	A3	2449	C2	2616	C5	3108	B4	3221	A3	3250	B3
1600	B5	2177	A4	2232	C3	2381	B1	2413	A3	2450	B2	2618	C5	3155	A3	3222	B4	3265	C3
1610	C5	2180	A4	2234	C3	2382	B1	2414	A2	2451	B2	2619	A5	3156	A4	3227	B3	3270	C3
2103	B4	2181	A4	2235	C3	2383	B1	2415	A2	2452	B2	2620	C5	3157	A4	3228	B2	3275	C3
2105	C4	2185	B4	2238	B3	2384	B1	2430	A2	2453	B2	2621	B5	3158	A4	3231	C3	3276	C3
2118	C4	2187	B4	2239	C3	2385	B1	2432	A2	2454	B2	2622	A5	3170	B4	3232	C3	3330	B2
2119	C4	2189	B4	2250	B3	2390	C1	2434	A3	2455	B2	2623	C5	3175	A4	3233	C4	3331	C1

3332	B1	3636	B5	7473	B1										
3335	C2	3637	C4	7610	C5										
3336	C1	3638	C4	7630	B5										
3337	C2	3997	B3	7755	C3										
3338	C1	4001	C4	9001	C1										
3340	C1	4002	B1	9002	B4										
3341	C1	4003	B2	9003	A4										
3345	C4	4005	B4	9004	A4										
3353	C4	4007	A4	9007	B4										
3354	C4	4008	C1	9010	C2										
3376	A1	4009	A3	9011	C3										
3377	A1	4011	C4	9012	C2										
3378	B1	4012	C2	9013	C2										
3380	A1	4013	A3	9014	A5										
3381	A1	4014	B2	9015	A2										
3382	A1	4015	B2	9016	A2										
3383	A1	4016	C5	9017	A3										
3384	A1	4017	A4	9018	A3										
3385	A1	4018	B4	9020	C1										
3386	A1	4019	B4	9024	B2										
3387	A1	4020	C4	9025	A2										
3388	A1	4021	B4	9026	A2										
3390	B1	4022	C1	9027	A1										
3391	B1	4023	A1	9028	A1										
3394	B1	4024	C2	9029	A1										
3395	B1	4025	C2	9030	A1										
3398	B1	4026	B3	9031	B1										
3399	B1	4027	C2	9032	B2										
3404	A3	4028	C3	9033	B1										
3405	A2	4029	C4	9034	B1										
3406	B2	4046	A3	9035	B1										
3407	B2	4047	A1	9036	B1										
3410	A2	4048	A3	9039	A1										
3411	A2	4049	A1	9040	B4										
3412	A2	4300	C1	9041	C2										
3413	A2	4402	C2	9042	B1										
3414	A2	4403	C2	9045	C3										
3416	A2	4404	C2	9046	A4										
3420	C1	4410	C2	9048	C2										
3434	A2	4411	C2	9050	B3										
3435	A2	4415	A3	9051	B3										
3436	A2	4417	C2	9052	B2										
3437	A2	4418	C2	9404	A3										
3438	A2	4419	C2												
3440	B3	4420	C2												
3441	B3	4421	C2												
3442	B3	4631	B5												
3444	B3	4632	B5												
3446	B3	4633	A2												
3448	B2	4634	C5												
3450	B2	5048	C2												
3452	B2	5118	C4												
3454	B2	5155	A3												
3460	C1	5157	A4												
3462	B2	5170	B4												
3463	C2	5175	A4												
3464	C2	5190	B4												
3465	B1	5400	A2												
3467	C1	5402	A3												
3471	C3	5403	A3												
3472	B3	5406	B1												
3473	C4	5408	B1												
3474	B1	5410	C1												
3475	B1	6300	B2												
3476	B1	6301	C4												
3477	B1	6464	C2												
3480	B2	6471	B1												
3600	B5	7103	B5												
3601	B5	7105	B4												
3602	B5	7125	B4												
3603	B5	7126	B4												
3604	C4	7200	B4												
3605	B5	7210	B4												
3610	C5	7233	C4												
3611	B5	7234	C4												
3612	B5	7235	C4												
3613	C5	7330	B1												
3614	C5	7335	C2												
3615	C5	7337	C1												
3616	C4	7338	C1												
3617	C5	7350	B4												
3618	C5	7380	B1												
3619	C5	7381	A1												
3620	C5	7385	A1												
3621	C5	7387	A1												
3622	B5	7400	A2												
3624	C4	7402	A2												
3625	B5	7404	A2												
3626	B5	7406	A2												
3630	B5	7408	B2												
3631	B5	7410	C2												
3632	B5	7466	C1												
3633	A2	7470	C1												
3634	A2	7471	C1												
3635	C4	7472	C1												

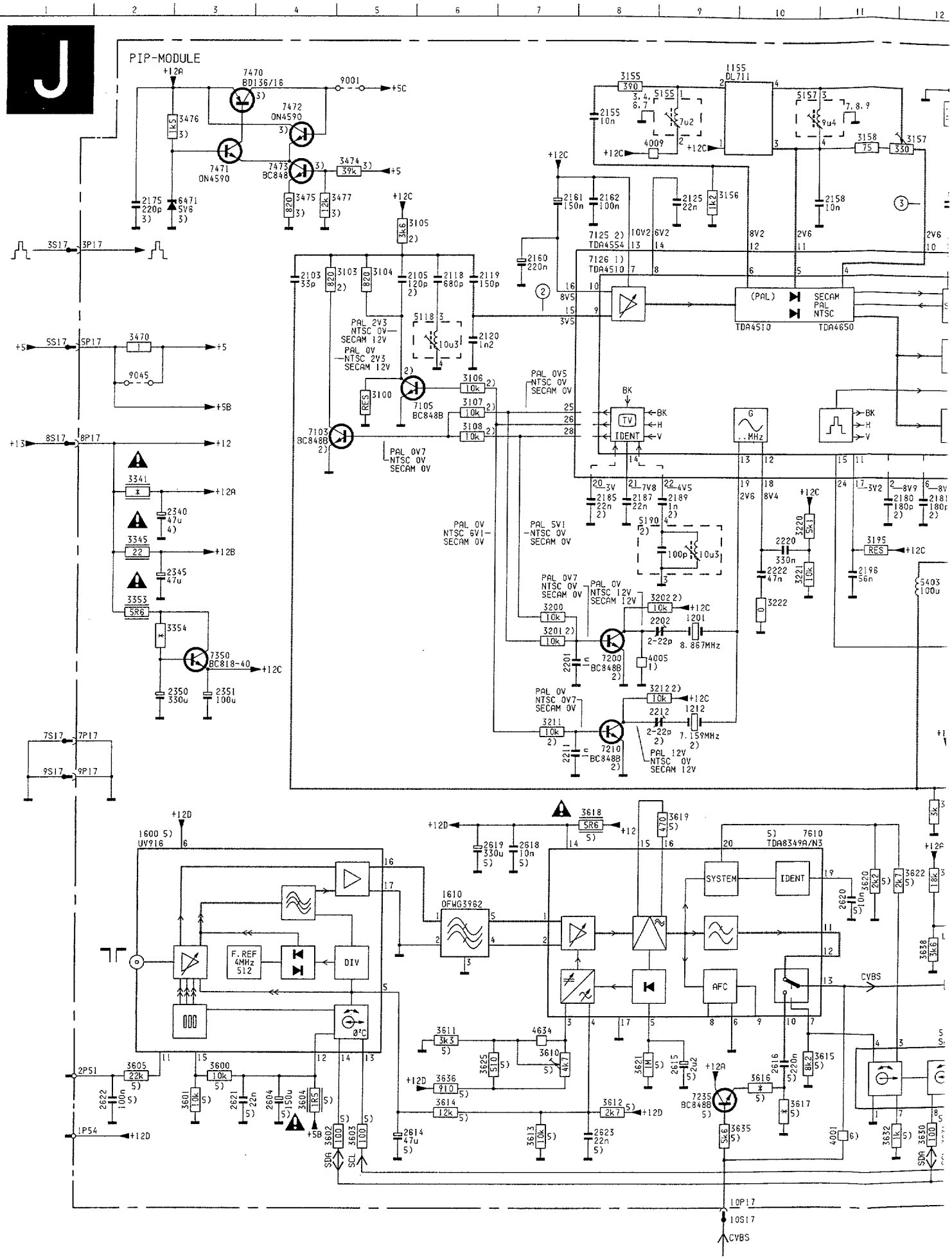
J
PIP-MODULE
+12A
7470 BD136/16
7472 ON4590
7471 ON4590
7473 BC848
9001
+5C
3476 1k5
3474 39k
+5
3475 820
3477 12k
2175 220p
6471 5V6
3105 3k6
+12C
3S17 3P17
5S17 5P17
3470 1
9045
+5B
8S17 8P17
+13
+12
3341
+12A
2340 47u
3345 22
+12B
2345 47u
3353 5R6
3354
7350 BC818-40
2350 330u
2351 100u
7S17 7P17
9S17 9P17
2103 33p
3103 820
3104 820
2105 120p
2118 680p
2119 150p
2160 220n
PAL 2V3 NTSC 0V SECAM 12V
PAL 0V NTSC 2V3 SECAM 12V
5118 10u3
2120 1n2
3100 RES
3106 10k
3107 10k
3108 10k
7105 BC848B
7103 BC848B
PAL 0V7 NTSC 0V SECAM 0V
PAL 0V5 NTSC 0V SECAM 0V
PAL 0V NTSC 6V1 SECAM 0V
PAL 5V1 NTSC 0V SECAM 0V
PAL 0V7 NTSC 0V SECAM 0V
PAL 0V NTSC 12V SECAM 12V
3155 390
5155 7u2
2155 10n
4009
1155 DL711
5157 9u4
3158 75
3157 330
2161 150n
2162 100n
2125 22n
3156 1k2
2158 10n
7125 2) TDA4554
7126 1) TDA4510
TDA4510
TDA4650
(PAL)
SECAM
PAL
NTSC
BK
H
V
TV
IDENT
G
..MHz
2185 22n
2187 22n
2189 1n
5190 10u3
100p
3220 5k1
2220 330n
2222 47n
3221 10k
3222
3195 RES
2196 56n
5403 100u
3202 10k
3200 10k
3201 10k
2202 2-22p
1201 8.867MHz
7200 BC848B
4005
2201 1n
3212 10k
2212 2-22p
1212 7.159MHz
3211 10k
7210 BC848B
2211 1n
PAL 12V NTSC 0V SECAM 12V
+12D
1600 5) UV916
1610 OFWG3962
F. REF 4MHz 512
DIV
Ø°C
3618 5R6
3619 470
2619 330u
2618 10n
7610 TDA8349A/N3
SYSTEM
IDENT
AFC
CVBS
2620 10n
3620 2k2
3622 2k
3638 3k6
3611 3k3
4634
3610 4k7
3625 510
3636 910
3614 12k
3612 2k7
3621 1M
2615 2u2
3616
3617
7235 BC848B
3635 5k6
3613 10k
2623 22n
2614 47u
3602 100
3603 100
SDA
SCL
2P51
1P54
3605 22k
3600 10k
3601 10k
2622 100n
2621 22n
2604 150n
3604 1R5
+5B
10P17
10S17
CVBS

Image dans l'image

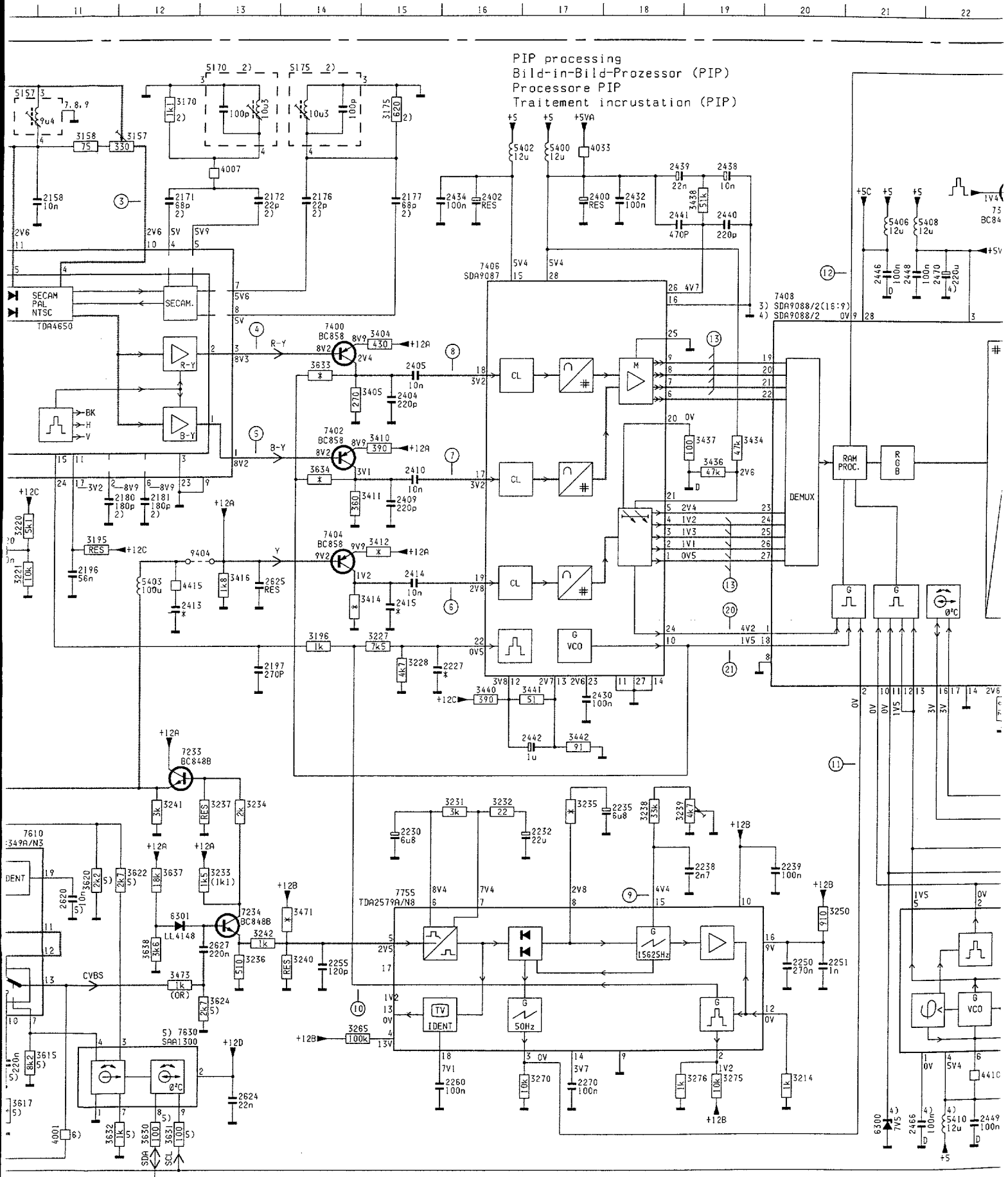

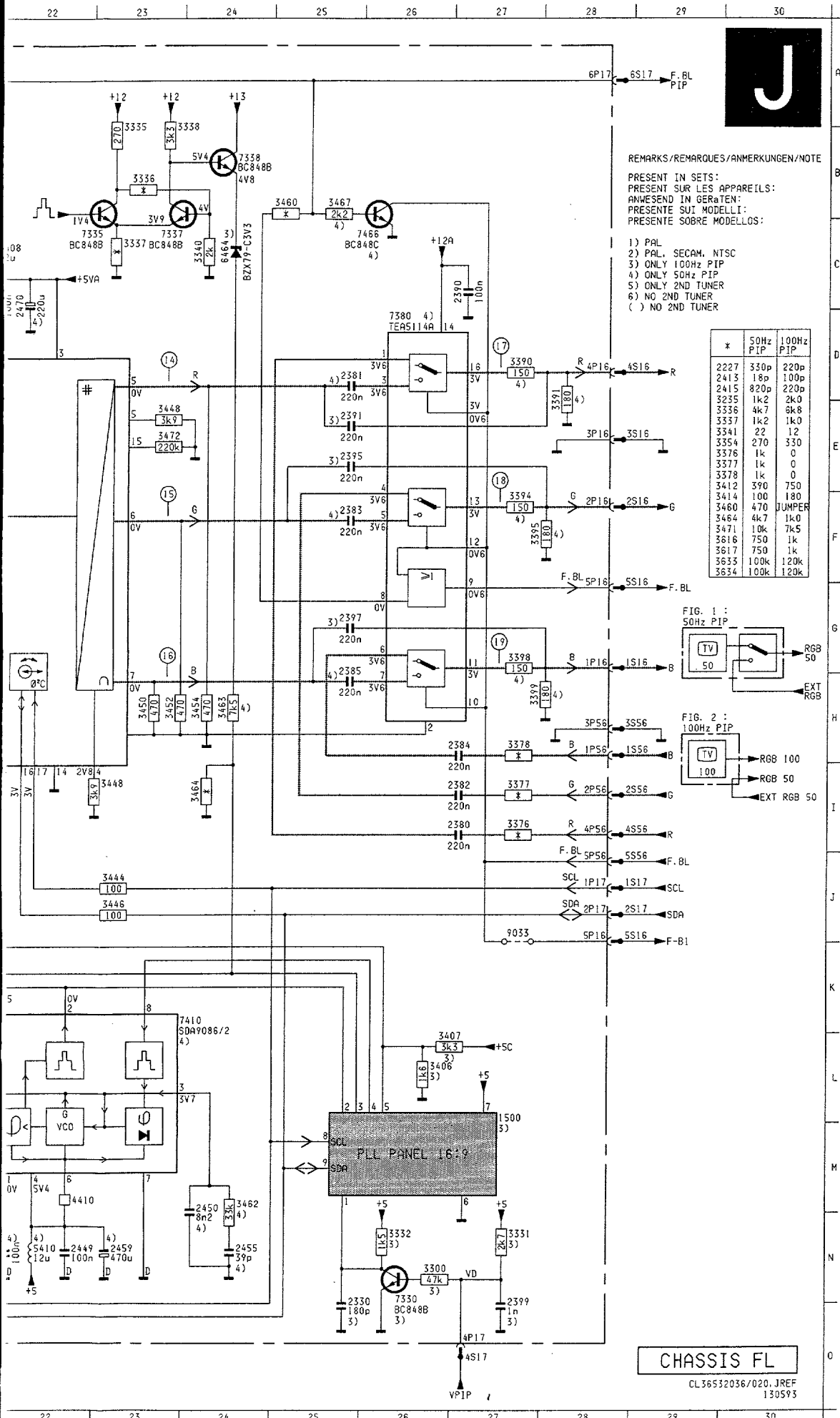

	1155	A 9	3201	H 7	4007	B13
	1201	H 9	3202	G 9	4009	B 8
	1212	I 9	3211	I 7	4033	B17
	1500	L27	3212	I 9	4410	M22
A	1600	J 2	3214	M20	4415	G12
	1610	K 6	3220	G10	4634	M 7
	2103	D 4	3221	G10	5118	D 5
	2105	D 5	3222	G10	5155	A 8
	2118	D 6	3227	H15	5157	A10
	2119	D 6	3228	H15	5170	A13
	2120	D 6	3231	J16	5175	A14
	2125	C 9	3232	J16	5190	G 8
B	2155	B 8	3233	K13	5400	B17
	2158	C11	3234	J13	5402	B16
	2160	C 7	3235	J17	5403	G12
	2161	C 7	3236	L13	5406	C21
	2162	C 8	3237	J13	5408	C21
	2171	C12	3238	J18	5410	N22
	2172	C13	3239	J19	6300	N21
	2175	C 2	3240	L14	6301	K12
C	2176	C14	3241	J12	6464	C24
	2177	C15	3242	L13	6471	C 3
	2180	F11	3250	K20	7103	E 4
	2181	F12	3265	M15	7105	E 5
	2185	F 8	3270	M17	7125	C 8
	2187	F 8	3275	M19	7126	C 8
	2189	F 9	3276	M19	7200	H 8
D	2196	G11	3300	N26	7210	I 8
	2197	H13	3331	N27	7233	I12
	2201	H 7	3332	N26	7234	K13
	2202	H 9	3335	A23	7235	N 9
	2211	I 7	3336	B23	7330	N26
	2212	I 9	3337	C23	7335	C23
	2220	G10	3338	A23	7337	C23
	2222	G10	3340	C24	7338	B24
E	2227	H16	3341	F 2	7350	H 3
	2230	J15	3345	G 2	7380	D26
	2232	J17	3353	G 2	7400	D14
	2235	J18	3354	H 2	7402	E14
	2238	K19	3376	I27	7404	G14
	2239	K20	3377	I27	7406	C16
	2250	L20	3378	H27	7408	D20
F	2251	L20	3390	D27	7410	K23
	2255	L14	3391	D28	7466	C26
	2260	M16	3394	F27	7470	A 3
	2270	M17	3395	F27	7471	B 3
	2330	O25	3398	G27	7472	A 4
	2340	F 2	3399	H27	7473	B 4
	2345	G 2	3404	D15	7610	J11
	2350	I 2	3405	E15	7630	M13
G	2351	I 3	3406	L26	7755	K15
	2380	I27	3407	L26	9001	A 5
	2381	D25	3410	F15	9033	J27
	2382	I27	3411	F15	9045	E 2
	2383	F25	3412	G15	9404	G13
	2384	H27	3414	G15		
	2385	H25	3416	G13		
H	2390	C27	3434	E19		
	2391	E25	3436	F19		
	2395	E25	3437	E19		
	2397	G25	3438	C19		
	2399	O27	3440	I16		
	2400	C17	3441	I17		
	2402	C16	3442	I17		
	2404	E15	3444	J23		
I	2405	E15	3446	J23		
	2409	F15	3448	E23		
	2410	F15	3448	I23		
	2413	H12	3450	H23		
	2414	G15	3452	H23		
	2415	H15	3454	H24		
	2430	I17	3460	B25		
	2432	C18	3462	M24		
J	2434	C16	3463	H24		
	2438	B19	3464	I24		
	2439	B18	3467	B25		
	2440	C19	3470	D 2		
	2441	C18	3471	K14		
	2442	I17	3472	E23		
	2446	C21	3473	L12		
K	2448	C21	3474	B 5		
	2449	N22	3475	B 4		
	2450	M24	3476	B 3		
	2455	N24	3477	B 4		
	2459	N23	3600	M 3		
	2466	N21	3601	N 3		
	2470	C22	3602	N 5		
L	2604	N 4	3603	N 5		
	2614	N 5	3604	N 4		
	2615	M 9	3605	M 2		
	2616	M10	3610	M 7		
	2618	K 7	3611	M 6		
	2619	K 6	3612	N 8		
	2620	K11	3613	N 7		
	2621	N 3	3614	N 6		
M	2622	N 2	3615	M11		
	2623	N 8	3616	M10		
	2624	N13	3617	N10		
	2625	G13	3618	J 8		
	2627	L13	3619	J 9		
	3100	E 5	3620	K11		
	3103	C 5	3621	M 8		
	3104	C 5	3622	K12		
N	3105	C 5	3624	L13		
	3106	E 6	3625	M 6		
	3107	E 6	3630	N12		
	3108	E 6	3631	N12		
	3155	A 8	3632	N12		
	3156	B 9	3633	E14		
	3157	B12	3634	F14		
	3158	B11	3635	N10		
O	3170	A12	3636	M 6		
	3175	A15	3637	K12		
	3195	G11	3638	L12		
	3196	H14	4001	N11		
	3200	H 7	4005	H 8		

LFR box FLx.24/.26 (Digital Scan)

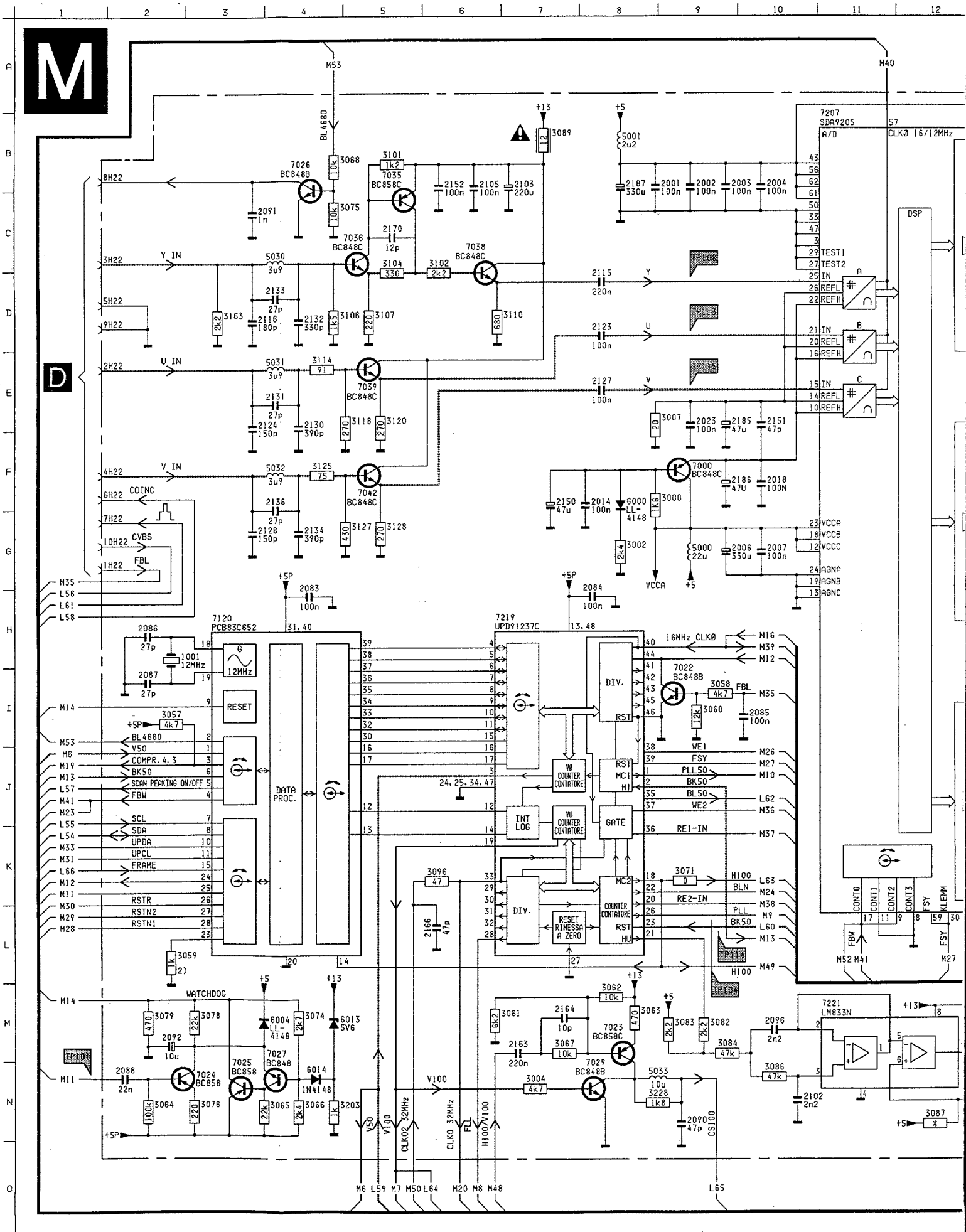

LFR box FLx.24/.26 (Digital Scan)

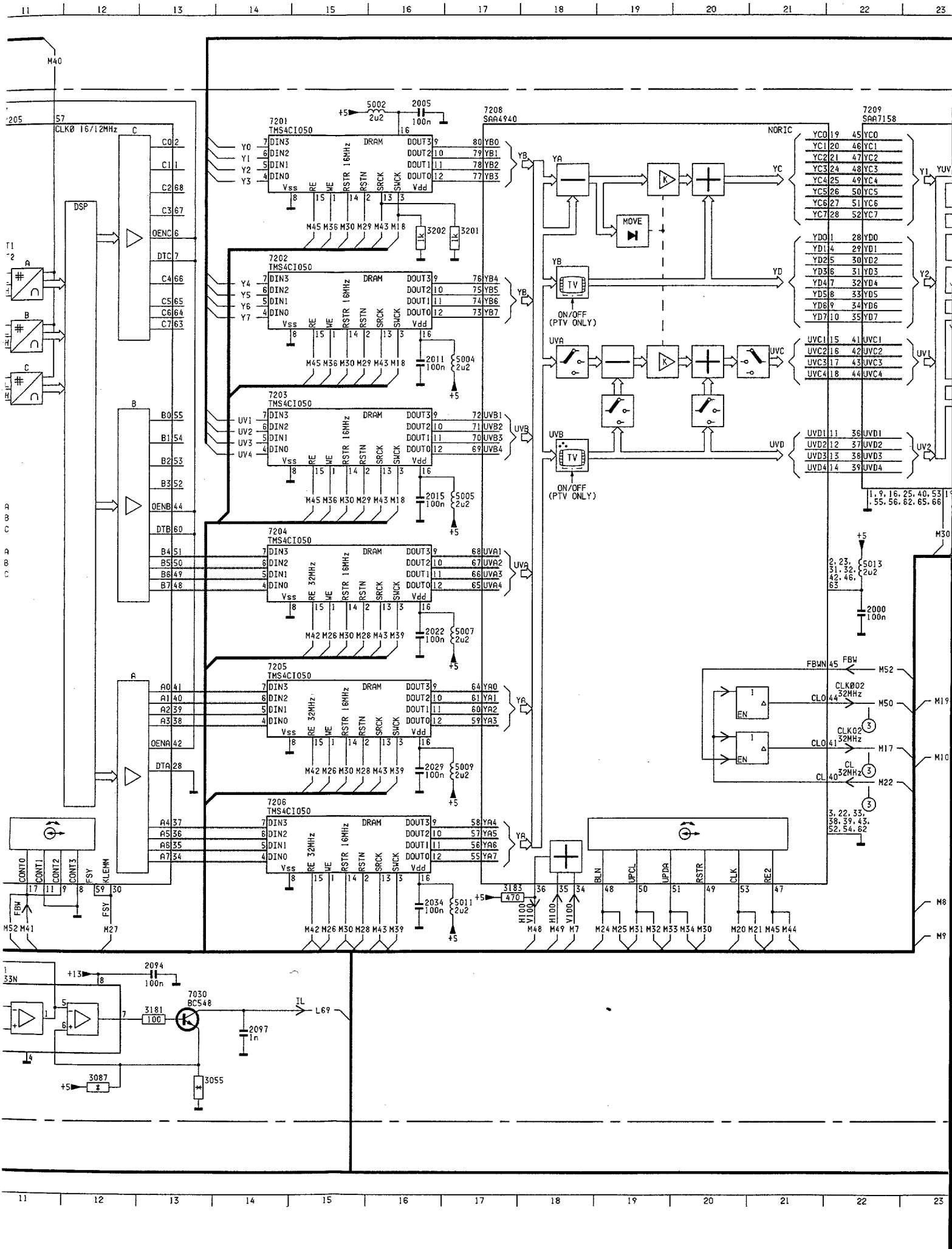

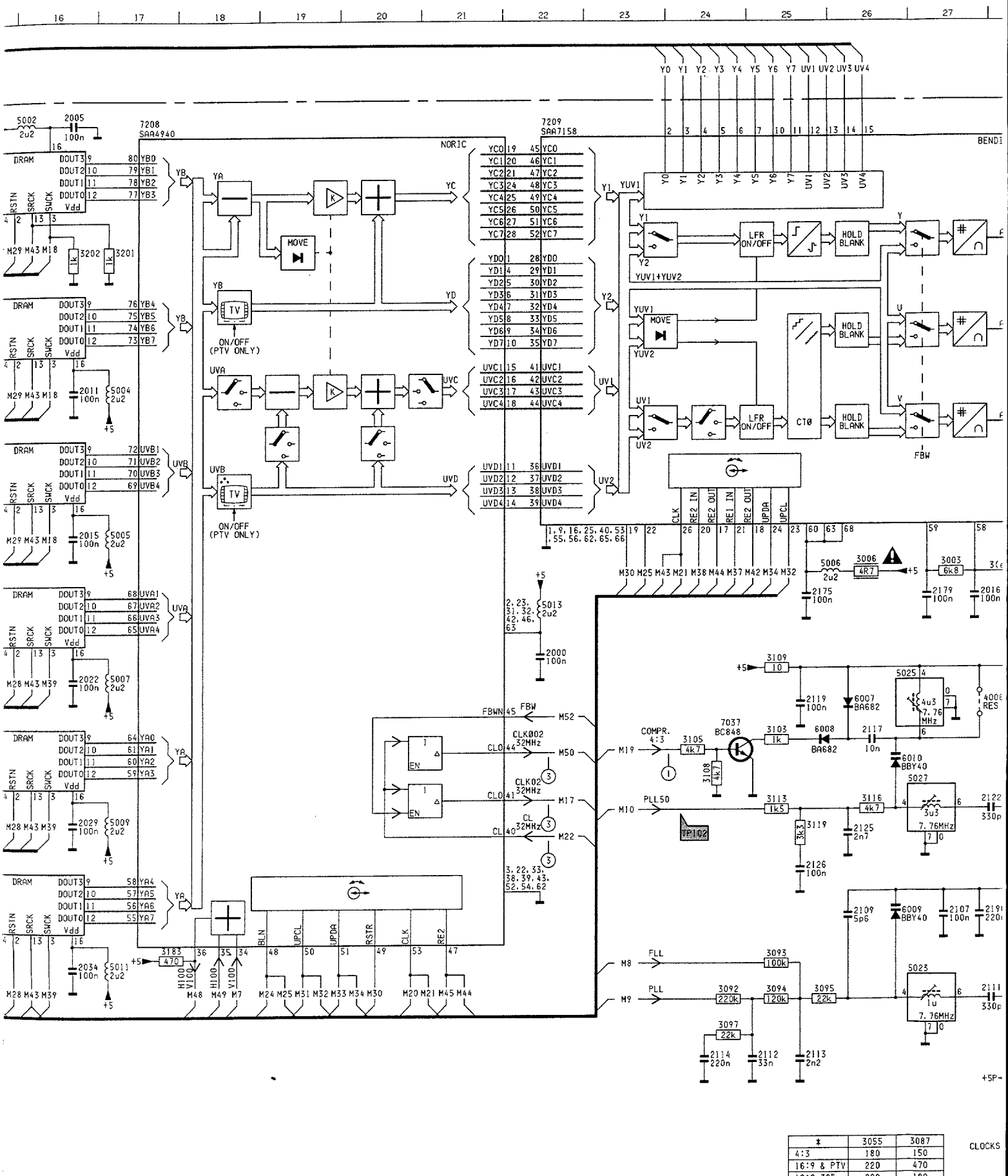

‡	3055	3087
4:3	180	150
16:9 & PTV	220	470
16:9 36"	200	180

LFR box FLx.24/.26 (Digital Scan)

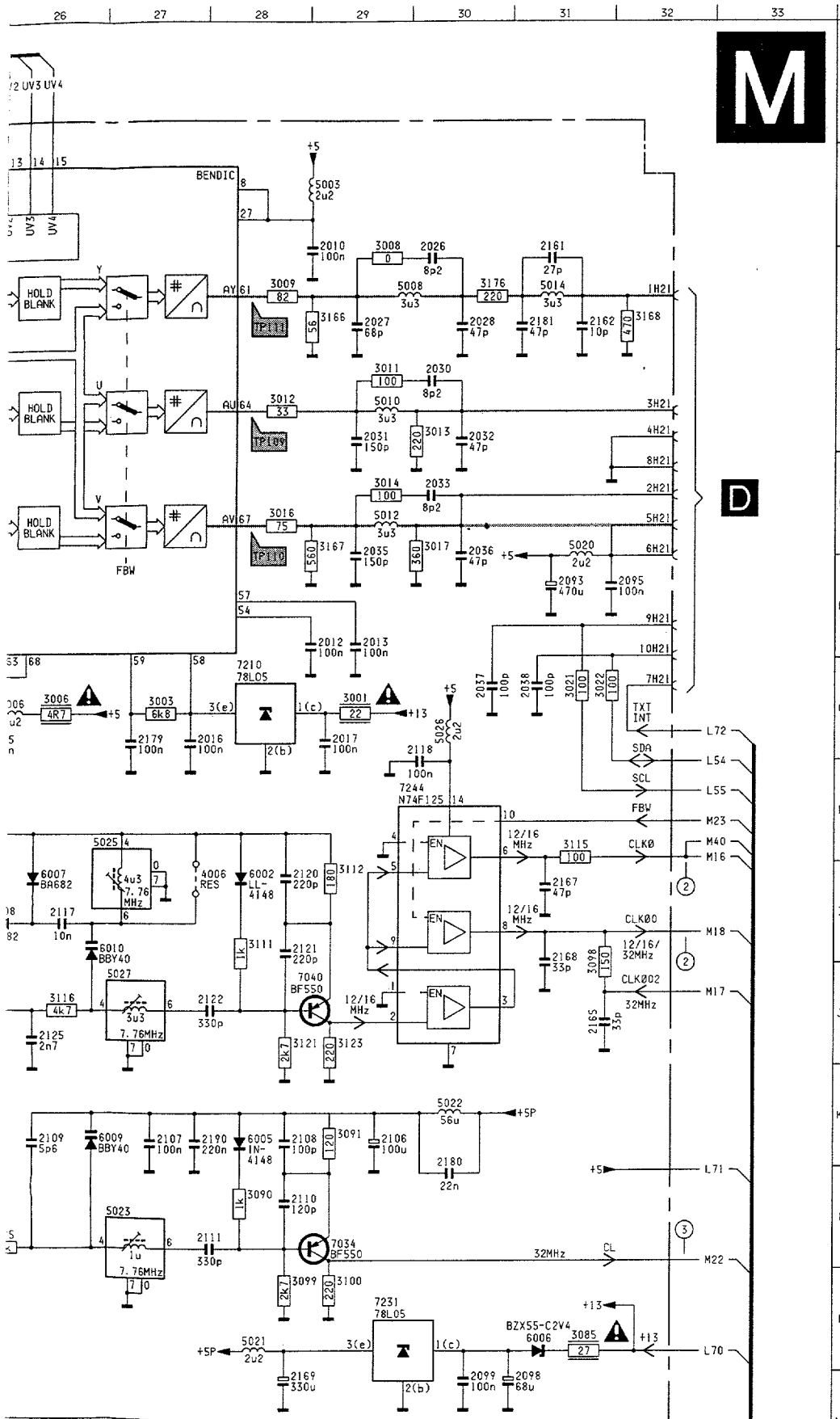

	3055	3087
	180	150
PTV	220	470
3"	200	180

	1001	H 2	3021	G31	7026	B 4
	2000	H22	3022	G31	7027	M 4
	2001	B 9	3055	N13	7029	N 8
	2002	B 9	3057	I 2	7030	M13
A	2003	B 9	3058	I 9	7034	L29
	2004	B10	3059	L 2	7035	B 5
	2005	B16	3060	I 9	7036	C 5
	2006	G 9	3061	M 6	7037	I24
	2007	G10	3062	M 8	7038	C 6
	2010	C29	3063	M 8	7039	E 5
	2011	E16	3064	N 2	7040	J29
	2012	F29	3065	N 4	7042	F 5
B	2013	F29	3066	N 4	7120	H 3
	2014	F 8	3067	M 7	7201	B14
	2015	G16	3068	B 4	7202	D14
	2016	G27	3071	K 9	7203	E14
	2017	G29	3074	M 4	7204	G14
	2018	F10	3075	C 4	7205	I14
	2022	H16	3076	N 3	7206	K14
	2023	E 9	3078	M 3	7207	B11
C	2026	C30	3079	M 2	7208	B17
	2027	C29	3082	M 9	7209	B22
	2028	C30	3083	M 9	7210	G28
	2029	J16	3084	M 9	7219	H 6
	2030	D30	3085	M31	7221	M11
	2031	D29	3086	N10	7231	M29
	2032	D30	3087	N12	7244	H29
D	2033	E30	3089	B 7		
	2034	L16	3090	L28		
	2035	F29	3091	K29		
	2036	F30	3092	L24		
	2037	G30	3093	L25		
	2038	G31	3094	L25		
	2083	H 4	3095	L25		
	2084	H 8	3096	K 6		
E	2085	I10	3097	M24		
	2086	H 2	3098	I31		
	2087	I 2	3099	M28		
	2088	N 2	3100	M29		
	2090	N 9	3101	B 5		
	2091	C 3	3102	C 6		
	2092	M 2	3103	I25		
	2093	F31	3104	C 5		
F	2094	M13	3105	I24		
	2095	F32	3106	D 4		
	2096	M10	3107	D 5		
	2097	N14	3108	J24		
	2098	N31	3109	H25		
	2099	N30	3110	D 7		
	2102	N10	3111	I28		
G	2103	B 7	3112	I29		
	2105	B 6	3113	J25		
	2106	K29	3114	E 4		
	2107	K27	3115	H31		
	2108	K28	3116	J26		
	2109	K26	3118	E 5		
	2110	L28	3119	J25		
H	2111	L28	3120	E 5		
	2112	M25	3121	J28		
	2113	M25	3123	J29		
	2114	M24	3125	F 4		
	2115	D 8	3127	G 5		
	2116	D 3	3128	G 5		
	2117	I26	3163	D 3		
	2118	G30	3166	C29		
I	2119	I25	3167	E29		
	2120	I28	3168	C32		
	2121	I28	3176	C30		
	2122	J28	3181	M13		
	2123	D 8	3183	L17		
	2124	E 3	3201	C17		
	2125	J26	3202	C16		
	2126	K25	3203	N 4		
J	2127	E 8	3228	N 8		
	2128	G 3	4006	I27		
	2130	E 4	5000	G 9		
	2131	E 4	5001	B 8		
	2132	D 4	5002	B16		
	2133	D 4	5003	B29		
	2134	G 4	5004	E17		
K	2136	F 4	5005	G17		
	2150	F 7	5006	G26		
	2151	E10	5007	H17		
	2152	B 6	5008	C29		
	2161	C31	5009	J17		
	2162	C31	5010	D29		
	2163	M 7	5011	L17		
	2164	M 7	5012	E29		
L	2165	J31	5013	G22		
	2166	L 6	5014	C31		
	2167	I31	5020	E31		
	2169	N28	5021	M28		
	2170	C 5	5022	K30		
	2175	G25	5023	L27		
	2179	G27	5025	H26		
M	2180	K30	5026	G30		
	2181	C31	5027	J27		
	2185	E 9	5030	C 4		
	2186	F 9	5031	E 4		
	2187	B 8	5032	F 4		
	2190	K27	5033	N 8		
	3000	F 9	6000	F 8		
	3001	G29	6002	I28		
N	3002	G 8	6004	M 4		
	3003	G27	6006	M31		
	3004	N 7	6007	I26		
	3006	G26	6008	I25		
	3007	E 9	6009	K26		
	3008	C29	6010	I26		
	3009	C28	6013	M 4		
	3011	D29	6014	N 4		
O	3012	D28	7000	F 9		
	3013	D30	7022	I 9		
	3014	E29	7023	M 8		
	3016	E28	7024	N 3		
	3017	E30	7025	N 3		

100 Hz / TXT (FLx.27)

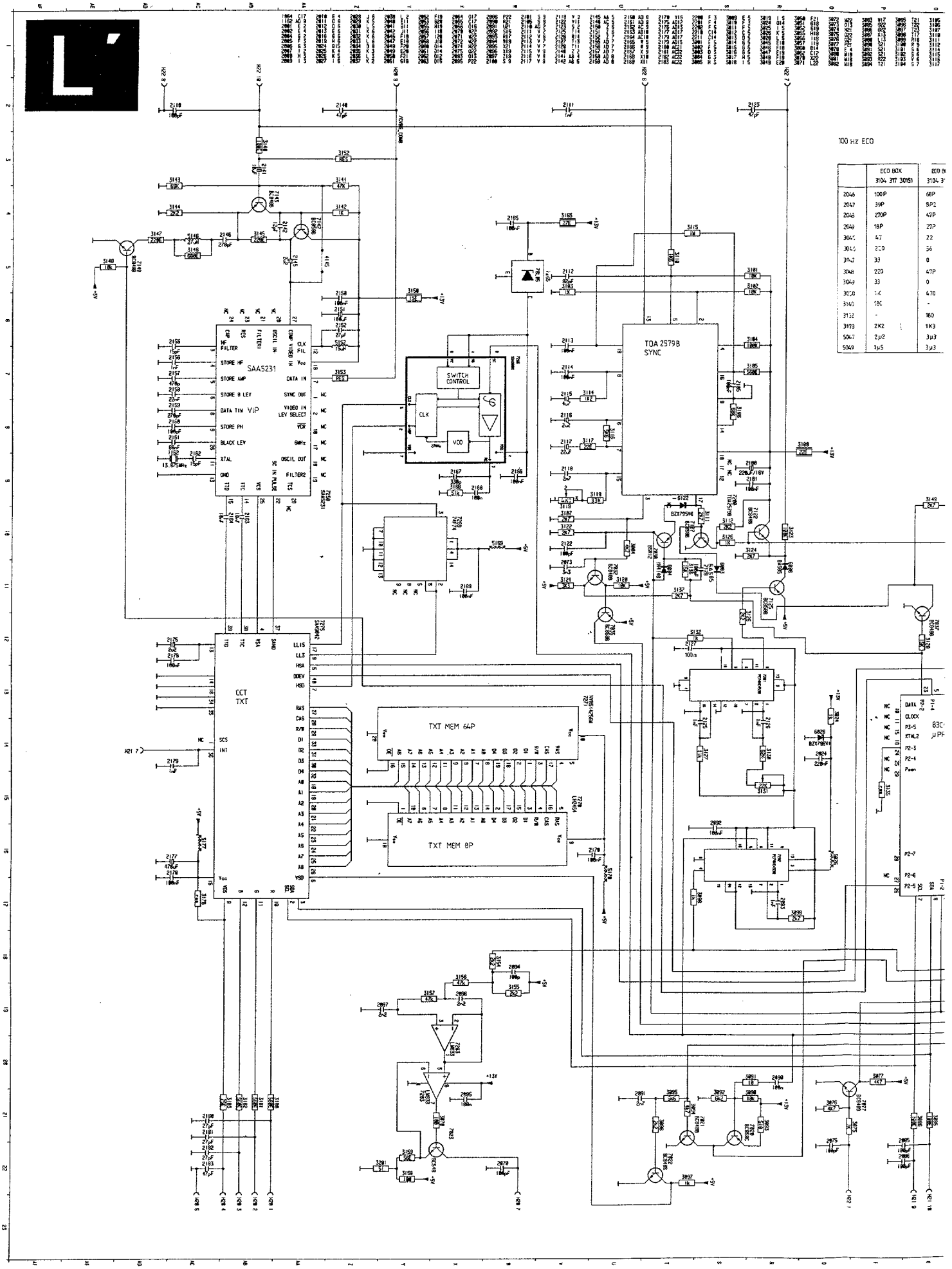

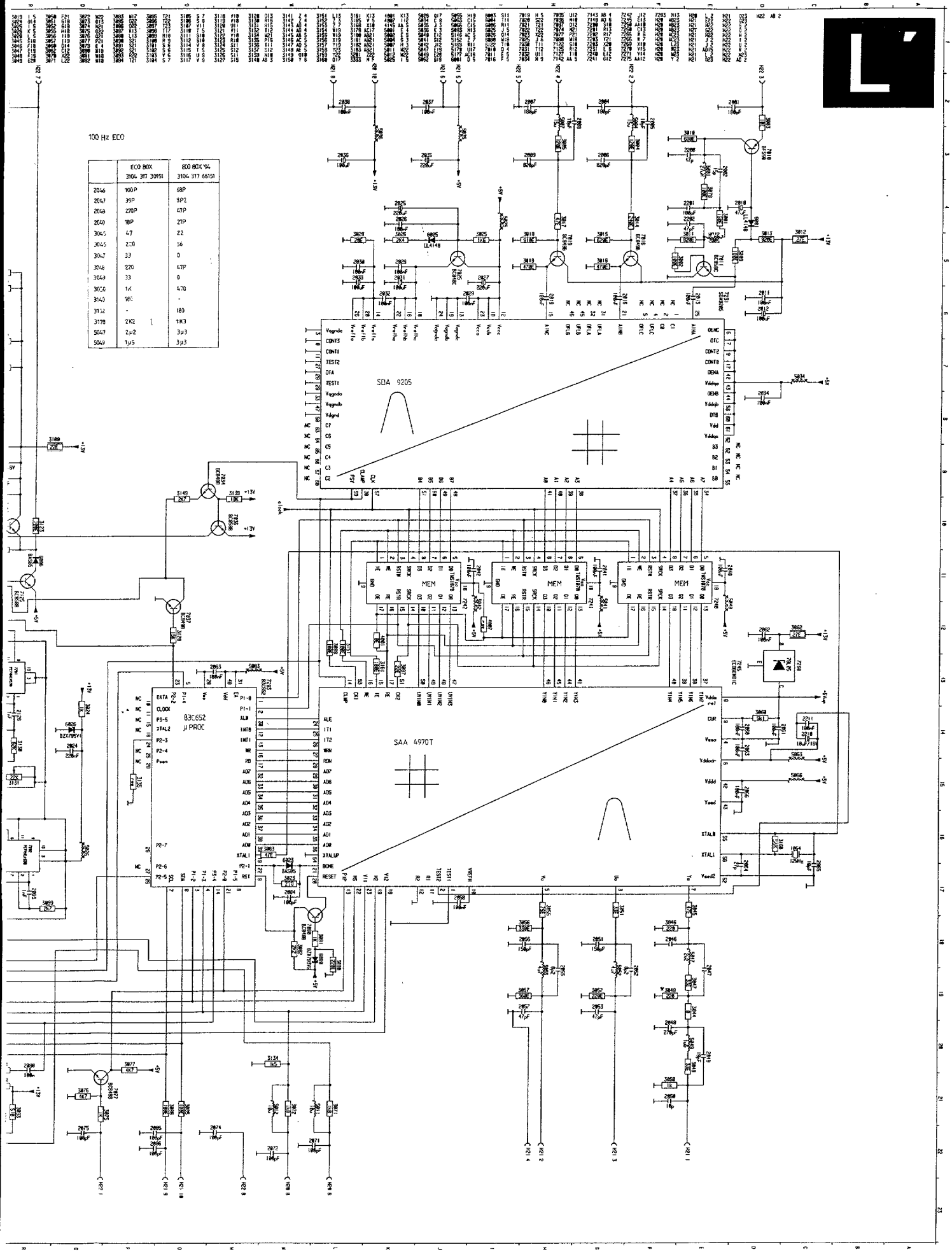
100 Hz ECO
ECO BOX 3104 317 30151
ECO BOX '94 3104 317 66151
2046 100P 68P
2047 39P 9P2
2048 270P 47P
2049 18P 27P
3045 47 22
3046 220 56
3047 33 0
3048 220 47P
3049 33 0
3050 1K 470
3140 100 -
3132 - 180
3178 2K2 1K3
5047 2µ2 3µ3
5049 1µ5 3µ3
SDA 9205
SAA 4970T
83C652 µPROC
MEM
+15V
+5V
+8V

100 Hz / TXT

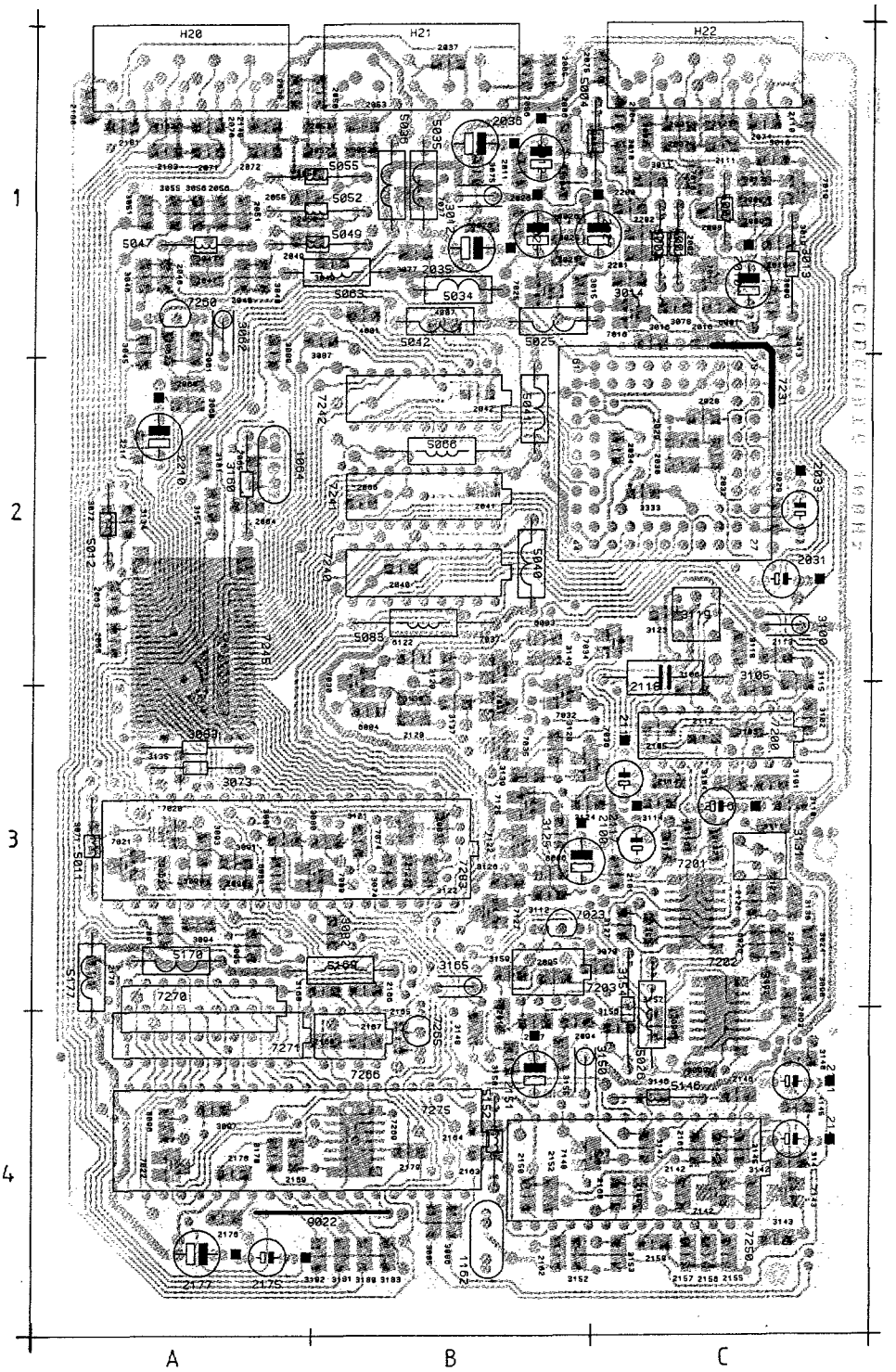

H20 A1	2013 C1	2037 B1	2058 A2	2090 A3	2115 C3	2151 B4	2169 A4	3004 B1
H21 B1	2016 C1	2038 A1	2060 A2	2091 A3	2116 C3	2152 B4	2170 A3	3005 C1
H22 C1	2019 C1	2040 B2	2061 A1	2092 C3	2117 C3	2155 C4	2175 A4	3009 C1
1064 A2	2024 C3	2041 B2	2062 A1	2093 C3	2118 C2	2156 C4	2176 A4	3010 C1
1162 B4	2025 B1	2042 B2	2063 A2	2094 B4	2122 B3	2157 C4	2177 A4	3011 C1
2001 C1	2026 B1	2046 A1	2064 A2	2095 B3	2123 C1	2158 C4	2178 A4	3012 B1
2002 C1	2027 C1	2047 A1	2065 A2	2096 C4	2125 C3	2159 C4	2179 B4	3013 C1
2004 C1	2028 C2	2048 A1	2066 B2	2097 B4	2126 C3	2160 C4	2181 A1	3014 C1
2005 C1	2029 C2	2049 A1	2070 A1	2100 B3	2127 C3	2161 C4	2182 A1	3015 B1
2006 B1	2030 C2	2050 B1	2071 A1	2101 C3	2128 B3	2162 B4	2183 A1	3016 C1
2007 C1	2031 C2	2051 A1	2072 A1	2105 C3	2140 A1	2163 B4	2200 C1	3017 C1
2008 C1	2032 C2	2052 A1	2074 C1	2110 C1	2141 C4	2164 B4	2201 C1	3018 C1
2009 C1	2033 C2	2053 B1	2075 C1	2111 C1	2142 C4	2165 B4	2202 C1	3019 C1
2010 C1	2034 C2	2055 A1	2083 B3	2112 C3	2145 C4	2166 B3	2210 A2	3024 C3
2011 B1	2035 B1	2056 A1	2085 B1	2113 C2	2146 C4	2167 B4	2211 A2	3025 B1
2012 B1	2036 B1	2057 B1	2086 B1	2114 C3	2150 B4	2168 B4	3003 C1	3026 B1

3028 C2	3159 B3	3143 C4	7200 C3					
3045 A1	3160 A2	3144 C4	7201 C3					
3046 A1	3161 A2	3145 C4	7202 C4					
3047 A1	3165 B3	3146 C4	7203 B3					
3048 A1	3168 B3	3147 C4	7231 C2					
3049 B1	3178 A4	3148 B4	7240 B2					
3050 A1	3180 B4	3149 B2	7241 B2					
3051 A1	3181 B4	3150 B4	7242 B2					
3052 B1	3182 B4	3147 C4	7245 A2					
3055 A1	3183 B4	3149 B2	7250 C4					
3056 A1	3201 B4	3150 B4	7260 A1					
3057 B1	3333 C2	3151 A2	7265 B4					
3060 A2	4001 B1	3152 B4	7266 B4					
3062 A1	4007 B1	3153 C4	7269 B4					
3070 C3	4145 C4	3154 C4	7270 A3					
3071 A3	5001 C1	3155 B4	7271 A4					
3072 A2	5002 C1	3156 C4	7275 A4					
3073 A3	5004 C1	3157 C4	7283 A3					
3074 B3	5007 C1	3158 B4	9022 B4					
3075 B1	5011 A3							
3076 B1	5012 A2							
3077 B1	5025 B1							
3078 C1	5026 C4							
3080 B3	5034 B1							
3081 A3	5035 B1							
3082 B3	5036 B1							
3083 A3	5040 B2							
3085 B4	5041 B2							
3086 B4	5042 B1							
3087 B1	5047 A1							
3088 A1	5049 B1							
3090 A3	5052 B1							
3091 A3	5055 B1							
3092 A3	5063 B1							
3093 A3	5066 B2							
3094 A3	5083 B2							
3095 A3	5146 C4							
3096 A4	5152 B4							
3097 A4	5169 B3							
3098 C3	5170 A3							
3099 C4	5177 A3							
3100 C2	6001 C1							
3101 C3	6003 B2							
3102 C3	6004 B3							
3103 C3	6006 B3							
3104 C3	6025 B1							
3105 C3	6026 C3							
3106 C3	6080 A3							
3110 C3	6122 B2							
3111 C3	7010 C1							
3112 B3	7011 C1							
3114 C3	7016 C1							
3115 C3	7019 C1							
3116 C3	7020 A3							
3117 C3	7021 A3							
3118 C2	7022 A4							
3119 C2	7023 B3							
3120 B3	7025 B1							
3121 B3	7030 B2							
3122 B3	7031 B3							
3123 C2	7032 B3							
3124 B3	7034 C2							
3125 B3	7035 B3							
3126 B3	7036 B3							
3127 C3	7037 B2							
3128 B2	7074 B3							
3130 C3	7077 B1							
3131 C3	7080 B3							
3132 C3	7122 B3							
3134 A2	7125 B3							
3135 A3	7127 B3							
3136 B3	7142 C4							
3137 B3	7143 C4							
3139 B3	7148 C4							
3140 C4	7200 C3							
3141 C4	7201 C3							
3142 C4	7202 C4							

LFR box

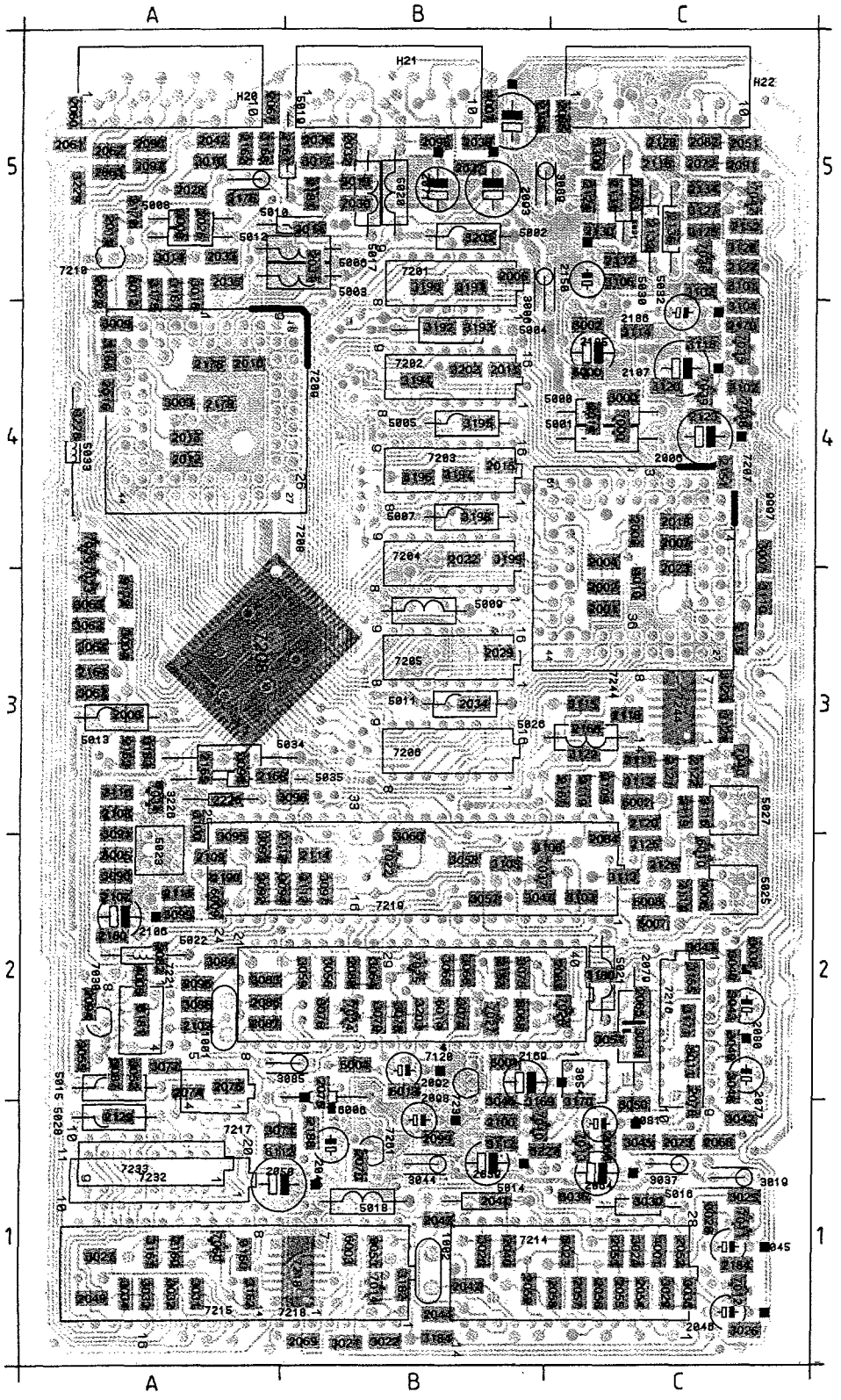

H20 A5	2013 A4	2034 B3	2050 A1	2067 A5	2083 C2	2100 B1	2118 C3	2134 C5	
H21 B5	2014 C4	2035 A5	2051 C5	2068 C1	2084 C2	2102 A2	2119 C3	2136 C5	
H22 C5	2015 B4	2036 B5	2052 C1	2069 B1	2085 C5	2103 B5	2120 C3	2150 C5	
1001 A2	2016 A4	2037 B5	2053 C1	2070 B1	2086 A2	2105 B5	2121 C3	2151 C4	
1002 B1	2017 A5	2038 B5	2054 C1	2071 B5	2087 A2	2106 A2	2122 C3	2152 C5	
2000 A3	2018 C4	2039 B1	2055 C1	2072 C5	2088 B2	2107 A2	2123 C4	2153 B2	
2001 C3	2022 B4	2040 B1	2056 C1	2073 C1	2090 A5	2108 A3	2124 C5	2160 A1	
2002 C3	2023 C4	2041 B1	2057 C1	2074 A2	2091 C5	2109 A2	2125 C2	2161 A5	
2003 C4	2026 A5	2042 A5	2058 C1	2075 B2	2092 B2	2110 A3	2126 C2	2162 A5	
2004 C4	2027 A5	2043 B1	2059 B1	2076 A2	2093 B5	2111 A2	2127 C5	2163 A3	
2005 B5	2028 A5	2044 B1	2060 A5	2077 C2	2094 A2	2112 B2	2128 C5	2164 A3	
2006 C4	2029 B3	2045 C1	2062 A5	2078 C1	2095 B5	2113 A2	2129 A1	2165 A3	
2007 C4	2030 B5	2046 C1	2063 A5	2079 C2	2096 A2	2114 B2	2130 C5	2166 A3	
2010 A4	2031 B5	2047 B1	2064 C1	2080 C2	2097 A5	2115 C3	2131 C5	2167 C3	
2011 B4	2032 B5	2048 B1	2065 C2	2081 C1	2098 B1	2116 C5	2132 C5	2168 C3	
2012 A4	2033 A5	2049 A1	2066 C1	2082 C5	2099 B1	2117 C2	2133 C5	2169 B2	

2170 C4	3092 A2	5018 B1							
2172 A5	3093 A2	5019 B5							
2175 A4	3094 A2	5020 B5							
2179 A4	3095 A2	5021 C2							
2180 A2	3096 B3	5022 A2							
2181 B5	3097 B2	5023 A2							
2184 C1	3098 A3	5025 C2							
2185 C4	3099 A2	5026 C3							
2186 C4	3100 A3	5027 C3							
2187 C4	3101 C5	5028 A1							
2188 B1	3102 C4	5030 C5							
2190 A2	3103 C2	5031 C5							
2226 A3	3104 C4	5032 C5							
3000 C4	3105 B2	5033 A4							
3001 A5	3106 C5	5034 A3							
3002 C4	3107 C5	5035 A3							
3003 A4	3108 B2	6000 C4							
3004 A3	3109 C3	6001 B2							
3006 B5	3110 C3	6002 C3							
3007 C4	3111 C3	6003 B1							
3008 A5	3112 C3	6004 B2							
3009 A4	3113 C2	6005 A2							
3010 A5	3114 C4	6006 B2							
3011 B5	3115 C3	6007 C2							
3012 A5	3116 C3	6008 C2							
3013 B5	3117 B1	6009 A2							
3014 A5	3118 C4	6010 C2							
3016 A5	3119 C3	6011 C2							
3017 B5	3120 C4	6013 B2							
3019 C1	3121 C3	6014 B2							
3020 B1	3122 C3	6112 A1							
3021 B1	3123 C3	7000 C4							
3022 B1	3125 C5	7010 B1							
3023 C1	3127 C5	7011 C1							
3024 C1	3128 C5	7012 C1							
3025 C1	3155 C2	7013 C1							
3026 C1	3160 A1	7014 B1							
3027 A1	3161 A1	7022 B2							
3028 C1	3162 A1	7023 A3							
3029 C1	3163 C5	7024 B2							
3030 C1	3166 A4	7025 B2							
3031 A1	3167 A5	7026 C2							
3032 A1	3168 A5	7027 B2							
3033 A1	3169 B1	7029 A4							
3034 A1	3170 C1	7030 A2							
3035 C1	3171 C2	7034 A3							
3036 C1	3172 A3	7035 C4							
3037 C1	3175 A5	7036 C5							
3038 C2	3176 A5	7037 B2							
3039 C2	3180 C2	7038 C4							
3040 C2	3181 A2	7039 C4							
3041 C2	3182 B1	7040 C3							
3042 C1	3183 A3	7042 C5							
3043 C2	3184 B1	7060 A1							
3044 B1	3190 B5	7120 B2							
3045 C1	3191 B5	7201 B5							
3046 B1	3192 B4	7202 B4							
3047 B2	3193 B4	7203 B4							
3048 C2	3194 B4	7204 B4							
3049 C2	3195 B4	7205 B3							
3050 C1	3196 B4	7206 B3							
3051 C2	3197 B4	7207 C4							
3052 A2	3198 B4	7208 A3							
3053 B1	3199 B4	7209 A4							
3054 C2	3201 B5	7210 A5							
3055 A2	3202 B4	7214 C1							
3056 B2	3203 B2	7215 A1							
3057 B2	3226 A3	7216 C2							
3058 B2	3227 B1	7217 A2							
3059 B2	3228 A4	7218 B1							
3060 B2	3229 A5	7219 B2							
3061 A3	3300 C5	7221 A2							
3062 A3	4001 C1	7231 B2							
3063 A3	4005 A2	7232 A1							
3064 B2	4006 C2	7233 A1							
3065 B2	4007 B5	7244 C3							
3066 B2	4010 C3	7261 B1							
3067 A3	5000 C4	9997 C4							
3068 B2	5001 C4								
3071 A1	5002 B5								
3074 B2	5003 B5								
3075 B2	5004 B4								
3076 B2	5005 B4								
3077 A2	5006 B5								
3078 B2	5007 B4								
3079 B2	5008 A5								
3082 A2	5009 B3								
3083 A2	5010 B5								
3084 A2	5011 B3								
3085 B2	5012 A5								
3086 A2	5013 A3								
3087 A2	5014 B1								
3089 B5	5015 A2								
3090 A2	5016 C1								
3091 A3	5017 B5								

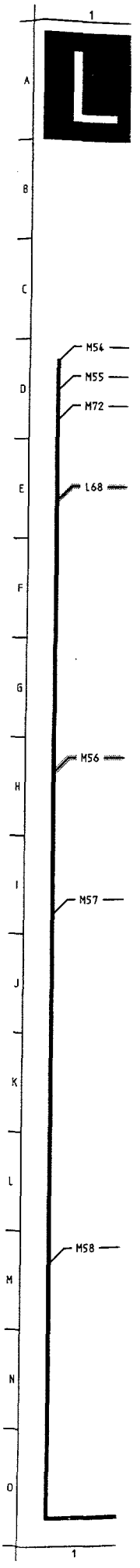

LFR box (Digital Scan)

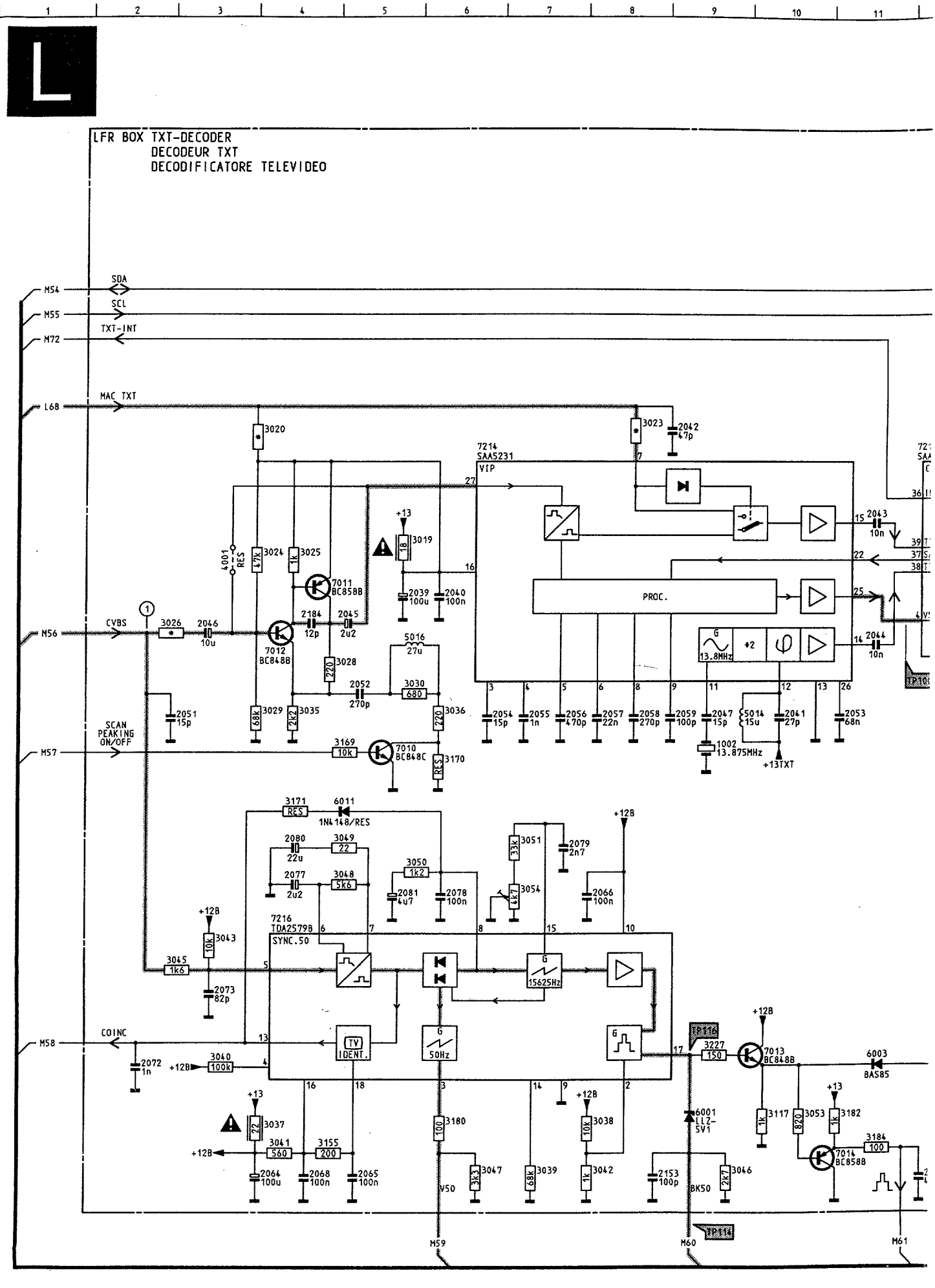

LFR box (Digital Scan)

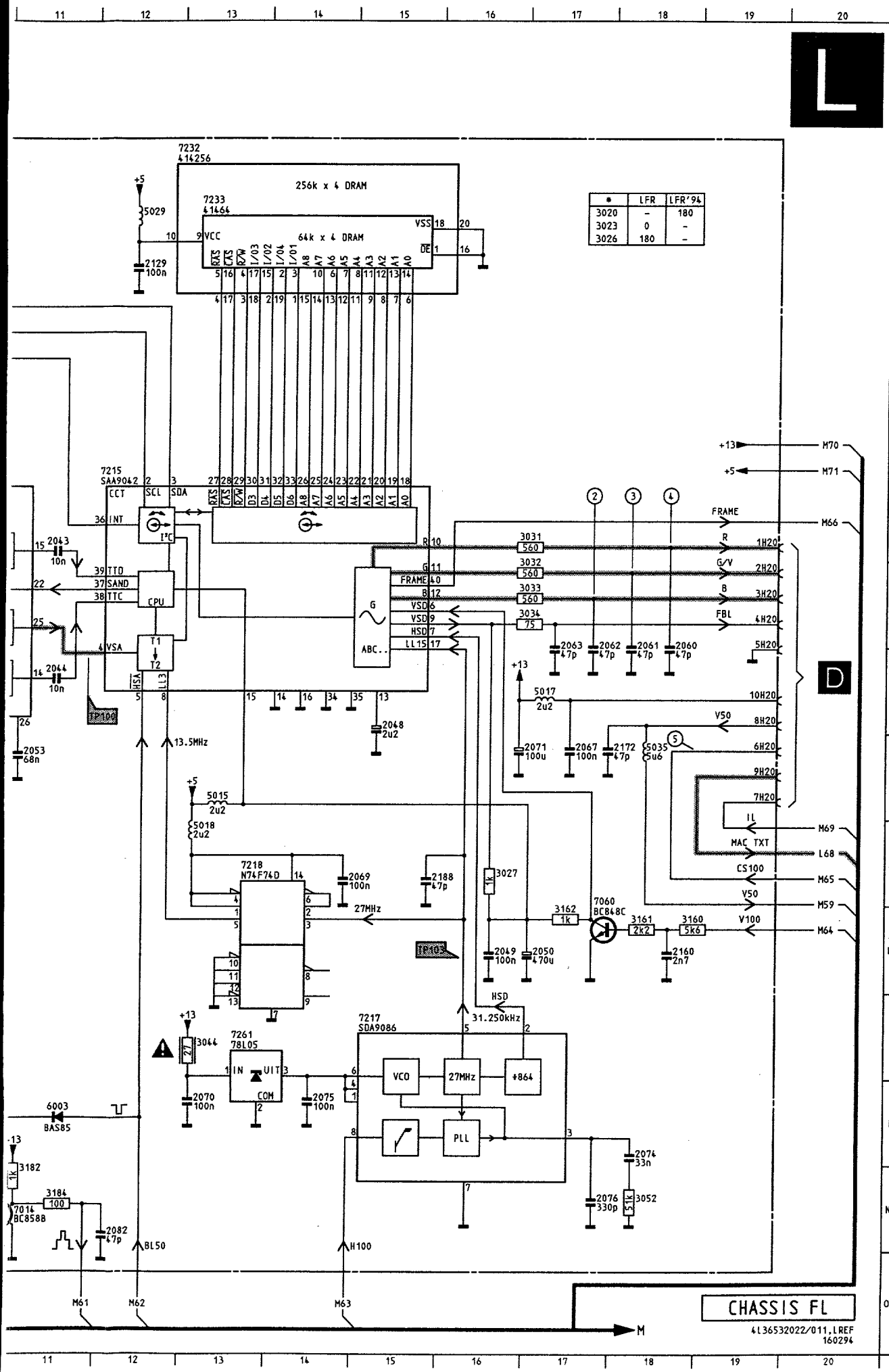

*	LFR	LFR'94
3020	-	180
3023	0	-
3026	180	-

1002	I 9	7217	L15	
2039	G 5	7218	J13	
2040	G 6	7232	B12	
2041	I10	7233	B13	
A 2042	E 9	7261	L13	
2043	F11			
2044	H11			
2045	H 5			
2046	H 3			
2047	I 9			
2048	H15			
2049	K16			
B 2050	K17			
2051	I 3			
2052	H 5			
2053	I11			
2054	I 6			
2055	I 7			
2056	I 7			
2057	I 8			
C 2058	I 8			
2059	I 9			
2060	H18			
2061	H18			
2062	H17			
2063	H17			
2064	N 4			
D 2065	N 5			
2066	K 8			
2067	I17			
2068	N 4			
2069	J14			
2070	M13			
2071	I16			
2072	M 2			
E 2073	L 3			
2074	M18			
2075	M14			
2076	N17			
2077	K 4			
2078	K 6			
2079	J 7			
F 2080	J 4			
2081	K 5			
2082	N12			
2129	C12			
2153	N 8			
2160	K18			
2172	I18			
2184	H 4			
G 2188	J15			
3019	G 5			
3020	E 4			
3023	E 8			
3024	G 4			
3025	G 4			
3026	H 2			
H 3027	J16			
3028	H 4			
3029	I 4			
3030	H 5			
3031	F17			
3032	G17			
3033	G17			
3034	G17			
I 3035	I 4			
3036	I 6			
3037	N 4			
3038	N 8			
3039	N 7			
3040	M 3			
3041	N 4			
3042	N 8			
J 3043	K 3			
3044	L13			
3045	L 3			
3046	N 9			
3047	N 6			
3048	K 5			
3049	J 5			
K 3050	K 5			
3051	J 7			
3052	N18			
3053	M10			
3054	K 7			
3117	M10			
3155	N 4			
3160	K18			
L 3161	K18			
3162	K17			
3169	I 5			
3170	I 6			
3171	J 4			
3180	N 6			
3182	M11			
M 3184	N11			
3227	M 9			
4001	G 3			
5014	I 9			
5015	I13			
5016	H 5			
5017	H17			
N 5018	J13			
5035	I18			
6001	N 9			
6003	M11			
6011	J 5			
7010	I 5			
7011	G 4			
7012	H 4			
7013	M10			
O 7014	N11			
7060	J17			
7214	F 6			
7215	F12			
7216	K 4			

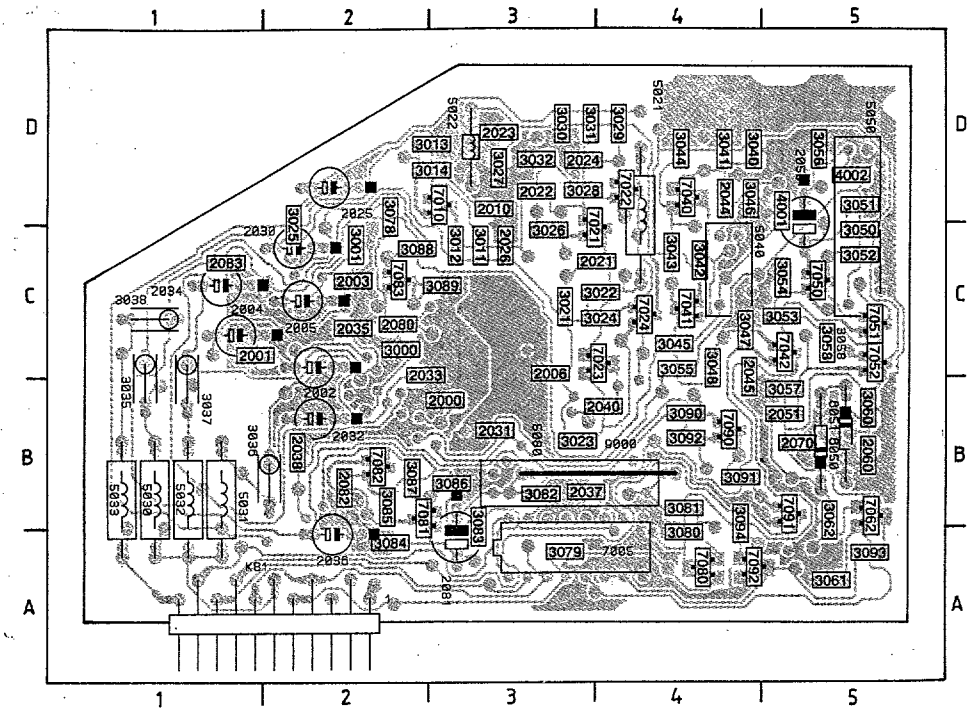

2000 B3	2032 B2	2082 B2	3029 D4	3048 C4	3081 B4	5021 D4	7023 C4	9000 B4
2001 C1	2033 C3	2083 C1	3030 D3	3050 C5	3082 B3	5022 D3	7024 C4	
2002 C2	2034 C1	3000 C2	3031 D4	3051 D5	3083 B3	5030 B1	7040 D4	
2003 C2	2035 C2	3001 C2	3032 D3	3052 C5	3084 A2	5031 B1	7041 C4	
2004 C1	2036 A2	3011 C3	3035 B1	3053 C5	3085 B2	5032 B1	7042 C5	
2005 C2	2037 B3	3012 C3	3036 B2	3054 C5	3086 B3	5033 B1	7050 C5	
2006 C3	2038 B2	3013 D3	3037 B1	3055 C4	3087 B2	5040 C4	7051 C5	
2010 D3	2040 B4	3014 D3	3038 C1	3056 D5	3088 C2	5050 C5	7052 C5	
2021 C4	2044 D4	3021 C3	3040 D4	3057 B5	3089 C3	5080 B3	7062 B5	
2022 D3	2045 C4	3022 C4	3041 D4	3058 C5	3090 B4	6050 B5	7080 A4	
2023 D3	2050 D5	3023 B3	3042 C4	3060 B5	3091 B4	6051 B5	7081 B2	
2024 D3	2051 B5	3024 C4	3043 C4	3061 A5	3092 B4	7000 C3	7082 B2	
2025 D2	2060 B5	3025 D2	3044 D4	3062 B5	3093 A5	7005 A3	7083 C2	
2026 C3	2070 B5	3026 C3	3045 C4	3078 D2	3094 B4	7010 D3	7090 B4	
2030 C2	2080 C2	3027 D3	3046 D4	3079 A3	4001 D5	7021 C4	7091 B5	
2031 B3	2081 A3	3028 D3	3047 C4	3080 A4	4002 D5	7022 D4	7092 A4	

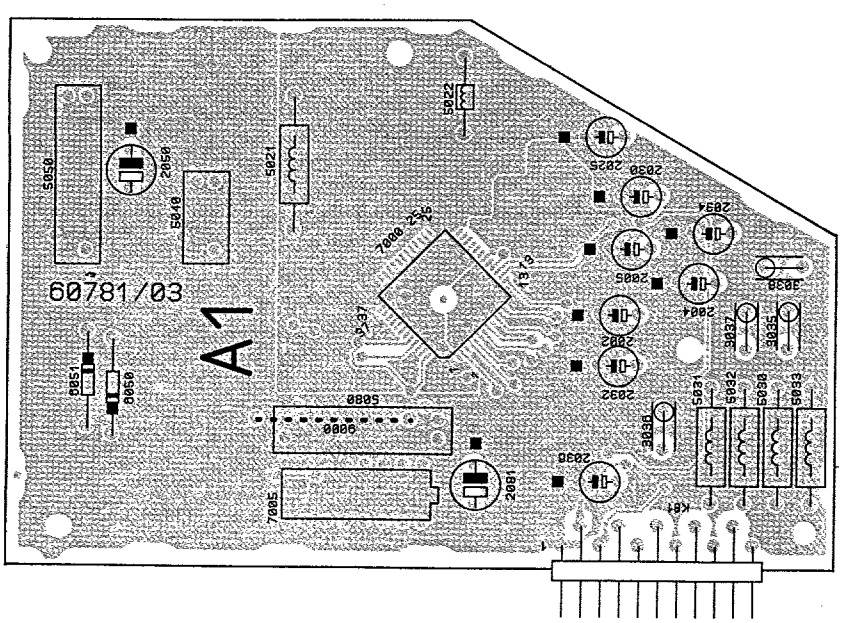

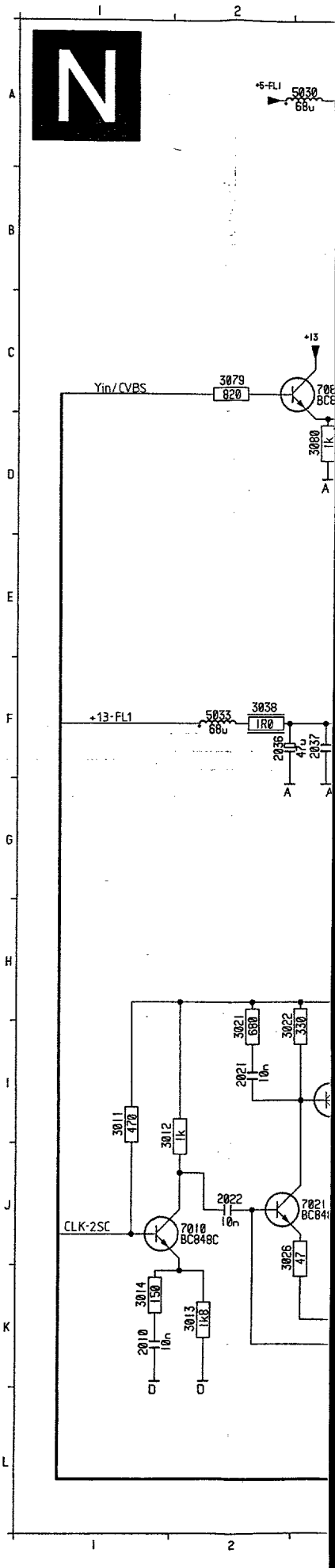

Comb filter / Kamm-Filter / Filtre en peigne

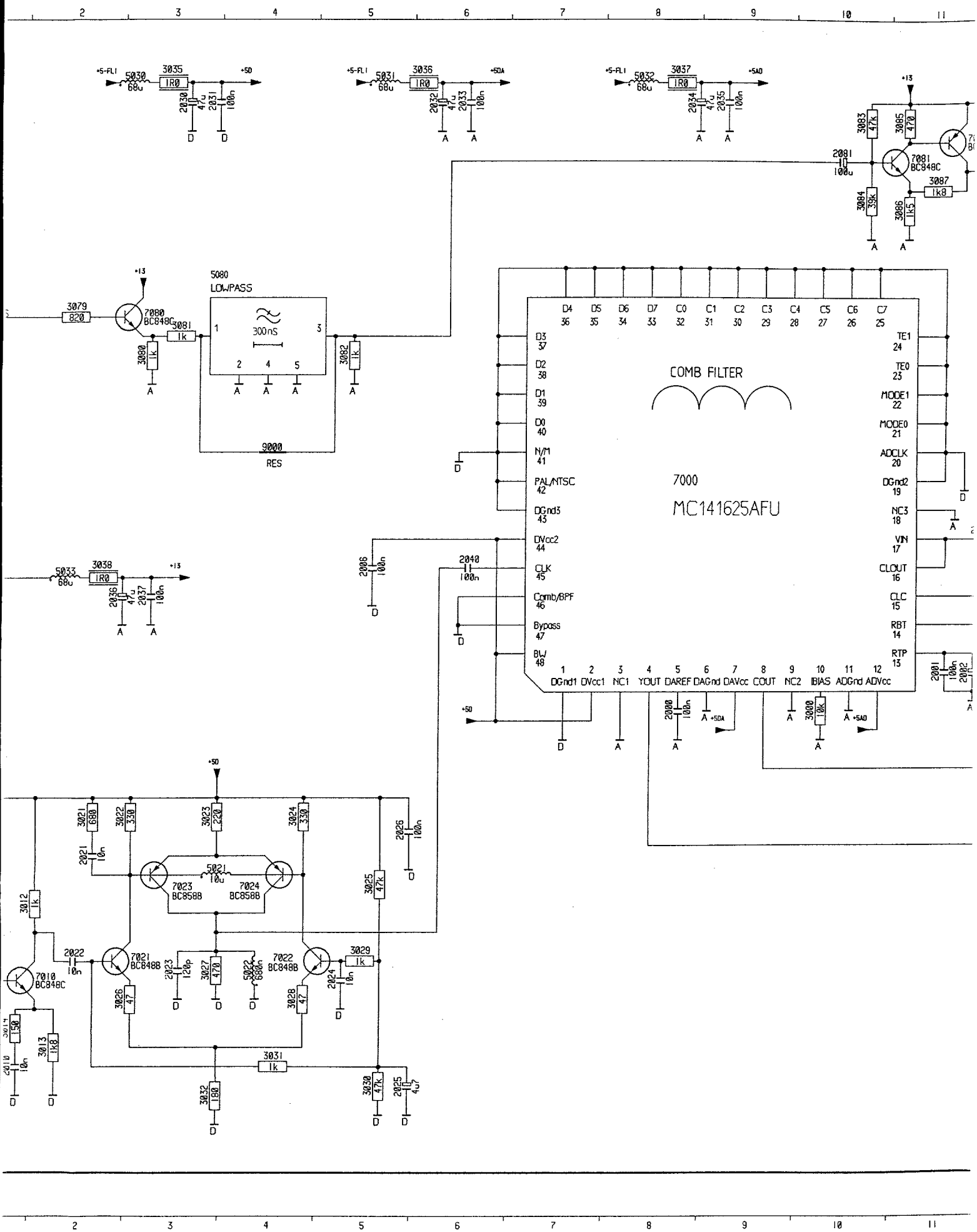

COMB FILTER
KAMM FILTER
MODULE FILTRE EN PEIGNE
FILTRO A PETTINE

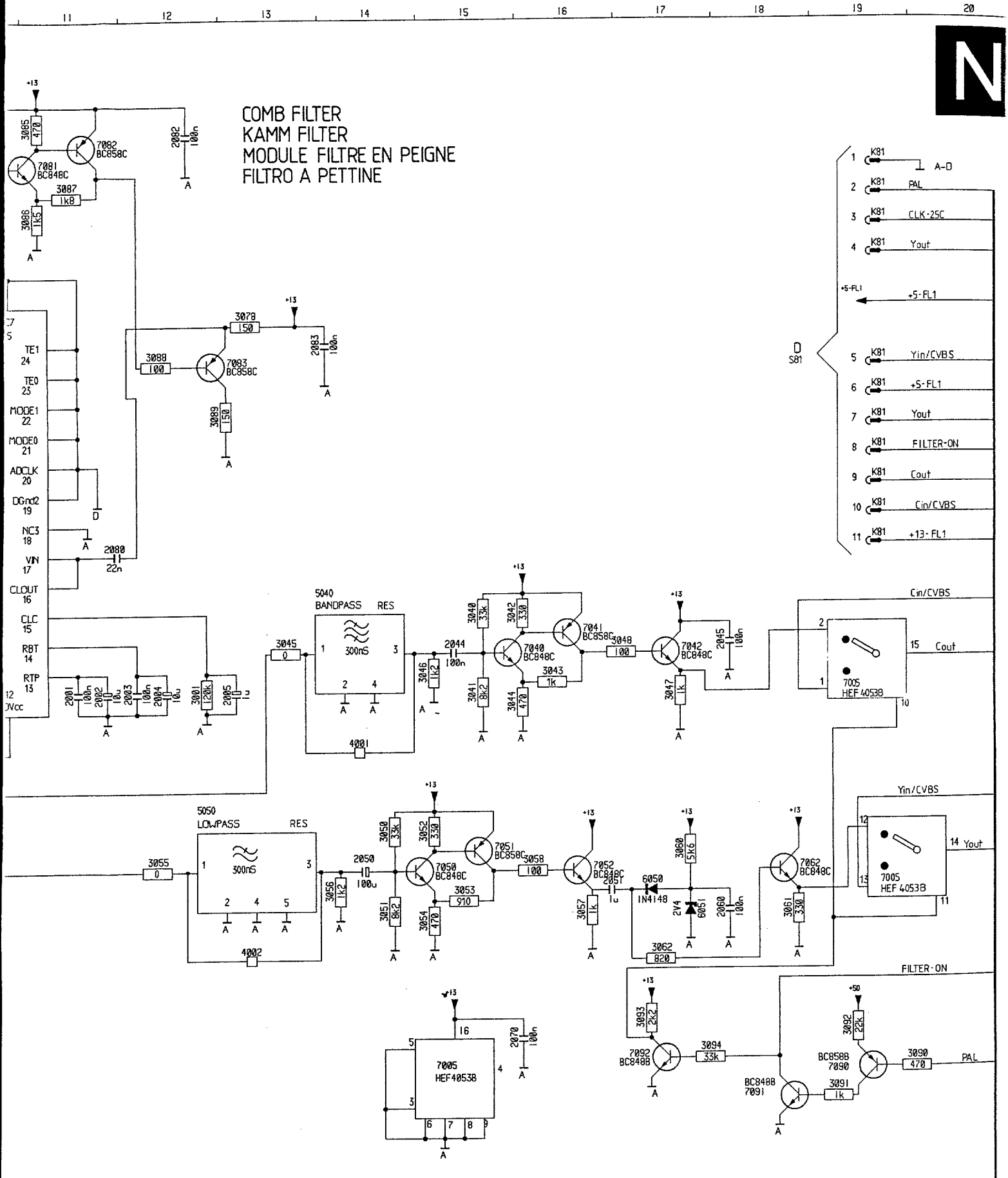

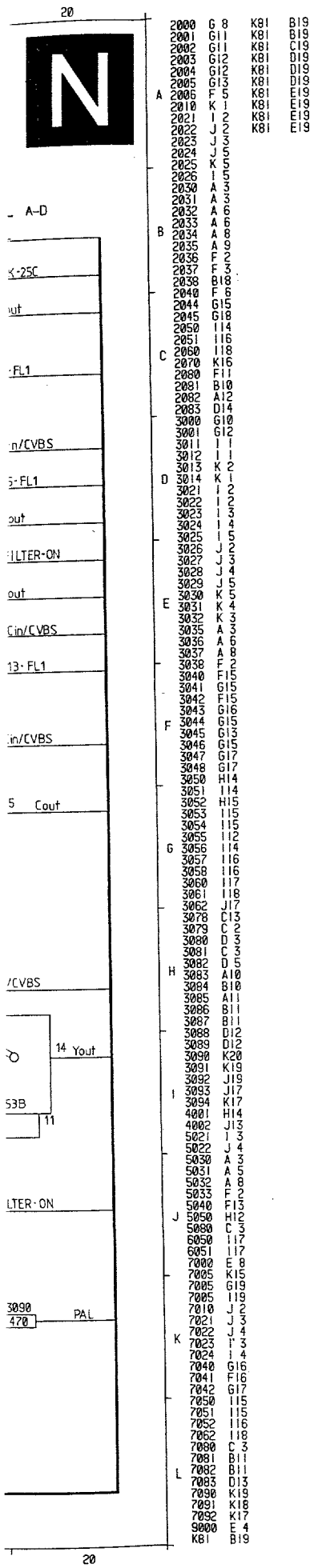

	2000	G 8	K81	B19
	2001	G11	K81	B19
	2002	G11	K81	C19
	2003	G12	K81	D19
	2004	G12	K81	D19
	2005	G13	K81	D19
A	2006	F 5	K81	E19
	2010	K 1	K81	E19
	2021	I 2	K81	E19
	2022	J 2	K81	E19
	2023	J 3		
	2024	J 5		
	2025	K 5		
	2026	I 5		
	2030	A 3		
	2031	A 3		
	2032	A 6		
B	2033	A 6		
	2034	A 8		
	2035	A 9		
	2036	F 2		
	2037	F 3		
	2038	B18		
	2040	F 6		
	2044	G15		
	2045	G18		
	2050	I14		
	2051	I16		
C	2060	I18		
	2070	K16		
	2080	F11		
	2081	B10		
	2082	A12		
	2083	D14		
	3000	G10		
	3001	G12		
	3011	I 1		
	3012	I 1		
	3013	K 2		
D	3014	K 1		
	3021	I 2		
	3022	I 2		
	3023	I 3		
	3024	I 4		
	3025	I 5		
	3026	J 2		
	3027	J 3		
	3028	J 4		
	3029	J 5		
	3030	K 5		
E	3031	K 4		
	3032	K 3		
	3035	A 3		
	3036	A 6		
	3037	A 8		
	3038	F 2		
	3040	F15		
	3041	G15		
	3042	F15		
	3043	G16		
F	3044	G15		
	3045	G13		
	3046	G15		
	3047	G17		
	3048	G17		
	3050	H14		
	3051	I14		
	3052	H15		
	3053	I15		
	3054	I15		
	3055	I12		
G	3056	I14		
	3057	I16		
	3058	I16		
	3060	I17		
	3061	I18		
	3062	JI7		
	3078	C13		
	3079	C 2		
	3080	D 3		
	3081	C 3		
	3082	D 5		
H	3083	A10		
	3084	B10		
	3085	A11		
	3086	B11		
	3087	B11		
	3088	D12		
	3089	D12		
	3090	K20		
	3091	K19		
	3092	J19		
I	3093	J17		
	3094	K17		
	4001	H14		
	4002	J13		
	5021	I 3		
	5022	J 4		
	5030	A 3		
	5031	A 5		
	5032	A 8		
	5033	F 2		
	5040	F13		
J	5050	H12		
	5080	C 3		
	6050	I17		
	6051	I17		
	7000	E 8		
	7005	K15		
	7005	G19		
	7005	I19		
	7010	J 2		
	7021	J 3		
K	7022	J 4		
	7023	I 3		
	7024	I 4		
	7040	G16		
	7041	F16		
	7042	G17		
	7050	I15		
	7051	I15		
	7052	I16		
	7062	I18		
	7080	C 3		
	7081	B11		
L	7082	B11		
	7083	D13		
	7090	K19		
	7091	K18		
	7092	K17		
	9000	E 4		
	K81		B19	

Black stretch

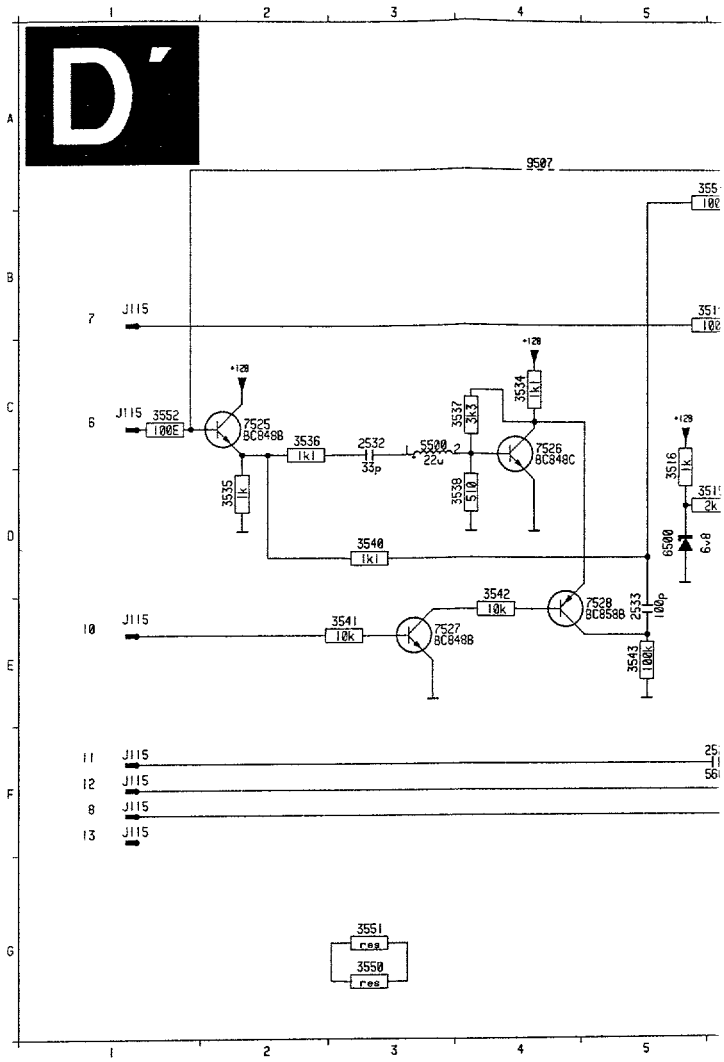

North-South (only 29")

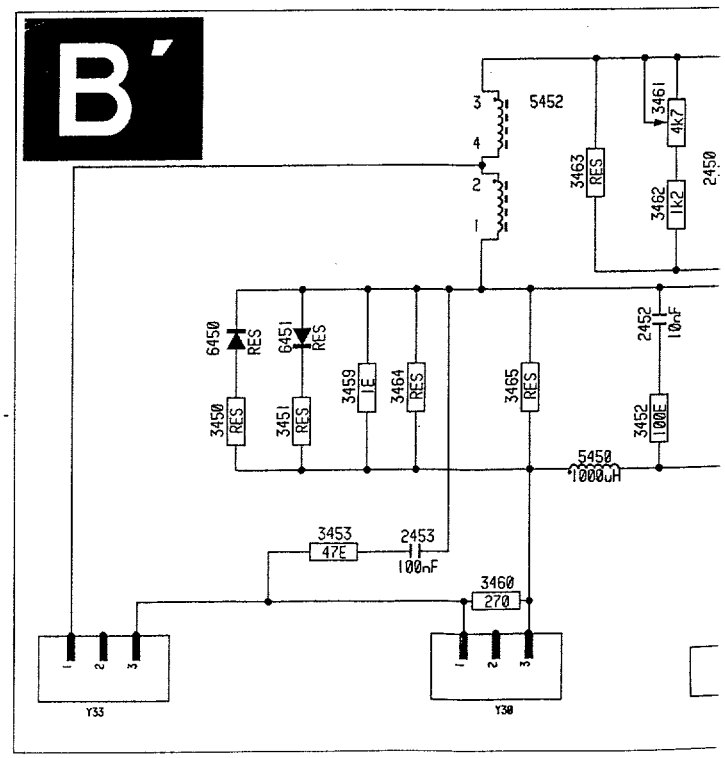

Black stretch

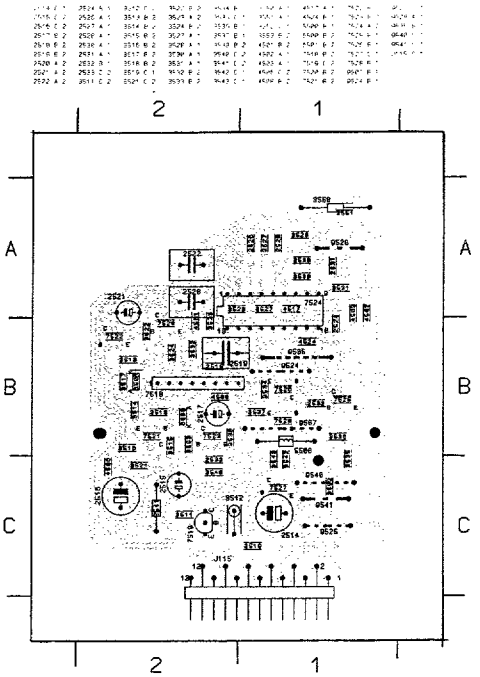

Euro AV3 Connector

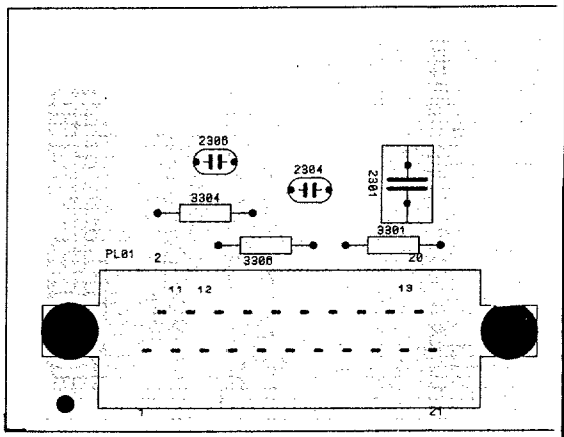

North-South (29")

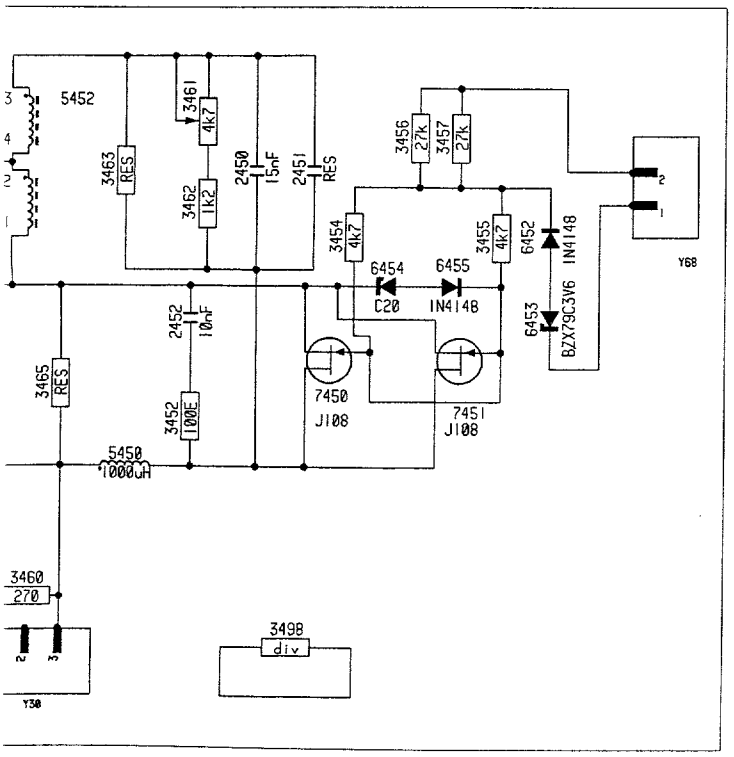

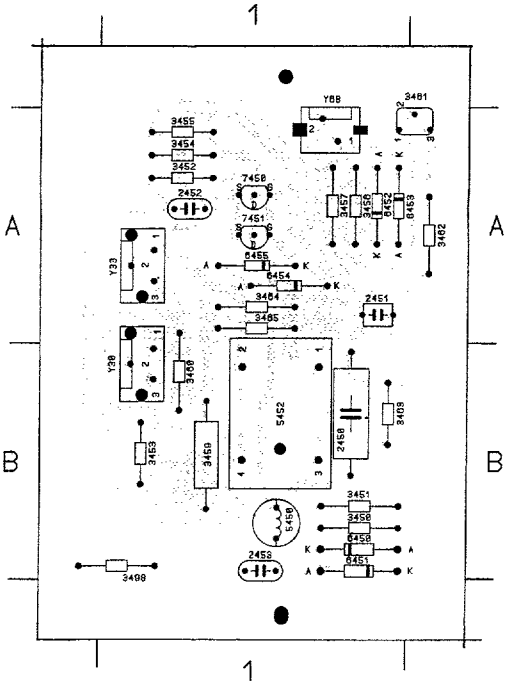

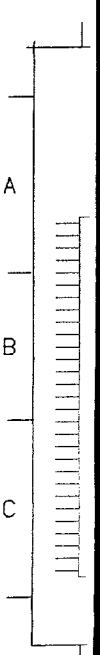

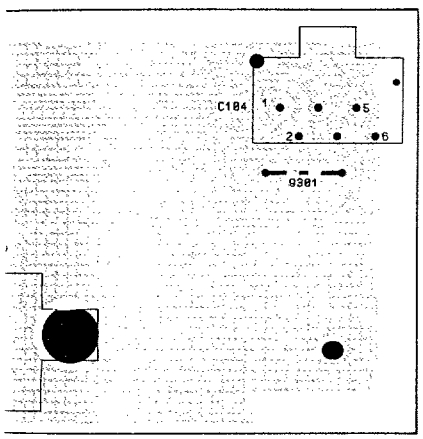

Euro AV3 Interface

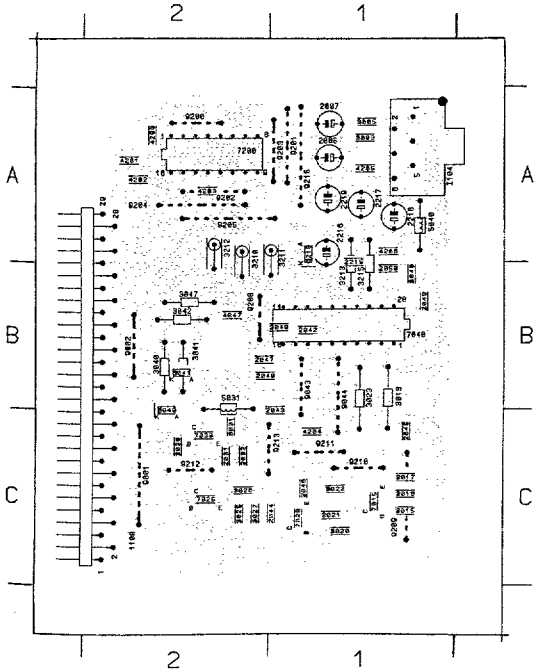

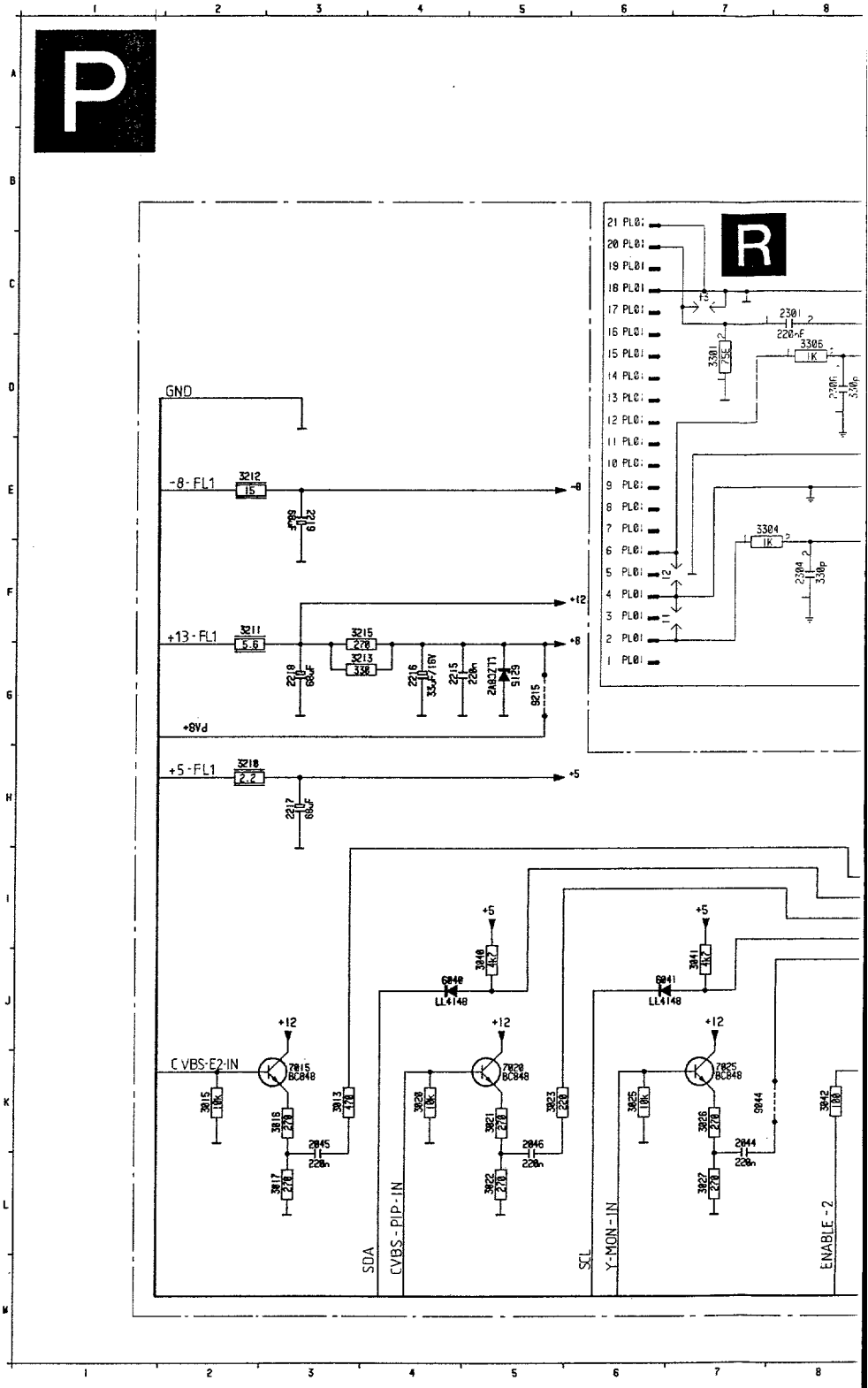

Interface / Branchement Euro AV3

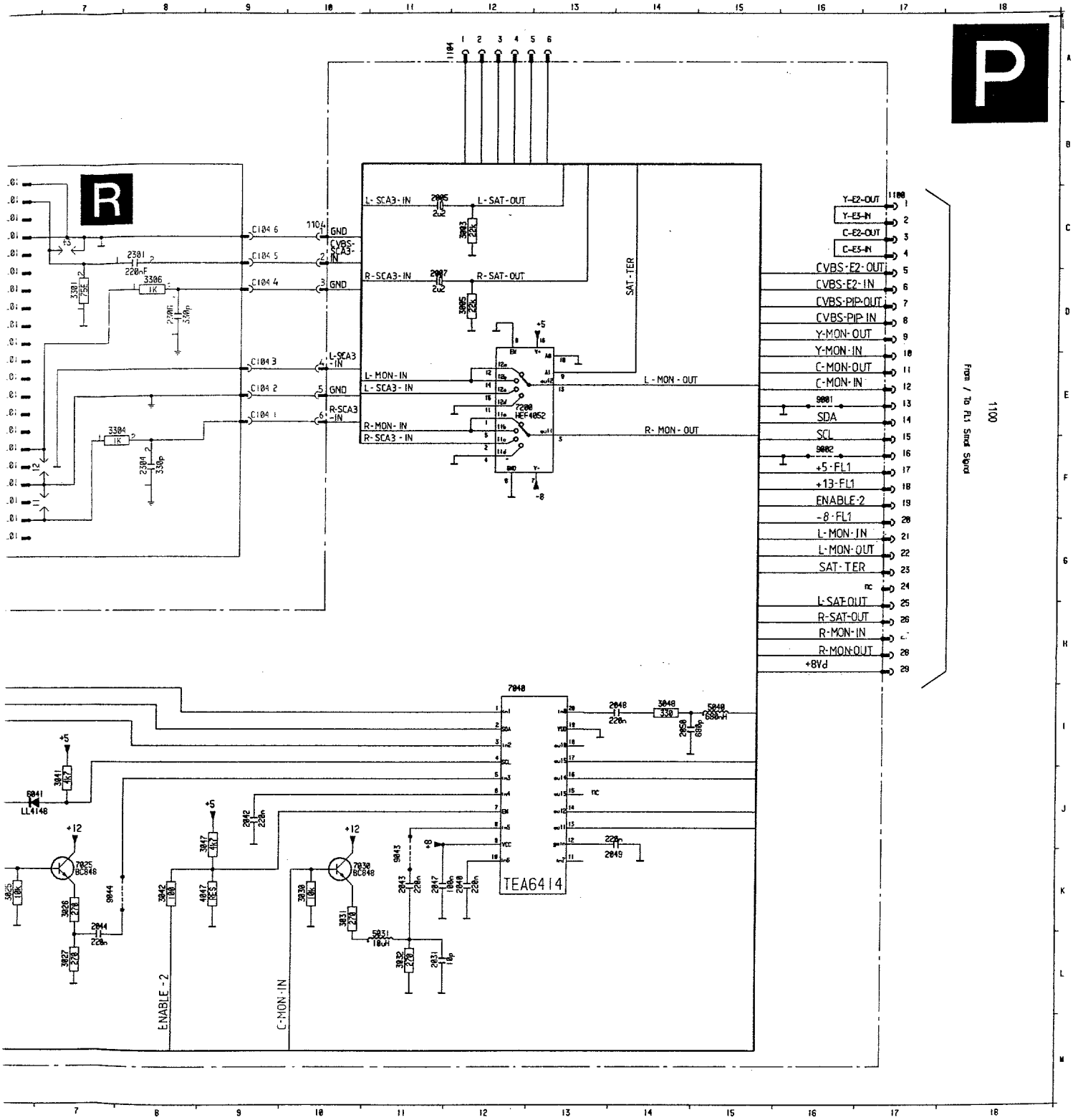

7. Electrical adjustments

Setting conditions

- Unless stated otherwise, the supply voltage used is: 220 - 240V ± 10%; 50 - 60Hz ± 5%
- Voltages and oscillograms are measured in elation to tuner earth. **Never** use the cooling plates as earth.
- Warming-up time ≈ 10 minutes
- For all measurements it is true that:
- probe Ri > 1MΩ; Ci < 10pF

1. Electrical settings on the large signal panel

1.1 +141V supply voltage

Supply the mains voltage; this must be isolated from the mains.
Connect a voltmeter over C2238.
Using R3371, on the SOPS DRIVE CIRCUIT (fig. 7.2) set the supply voltage to + 141V ±0.5V.

1.2 +5V supply voltage (FLx.x6/FLx.x7)

Connect a voltmeter to pin 8 of L02
Adjust the voltage to 5.4V using R3558

1.3 +13V supply voltage (FLx.x6/FLx.x7)

Connect a voltmeter to pin 6 of connector L02
Adjust the voltage to 14.2V using R3234.

1.4 Focusing

This is set with the focus potentiometer (top one on the Line output transformer/DAF Unit).

1.5 Dynamic 1) Astigmatic focus

This is set with the aid of the potentiometer on the bottom right of the DAF transformer. Repeat the adjustment of the Vg2 and focus.

1.6 Vg2 setting

Supply an aerial signal.
Set the contrast to maximum and the brightness and saturation to nominal.
Using an oscilloscope set to field frequency, measure the direct voltage level of the measurement pulse (fig. 7.1) on pin 9 of IC7705, IC7706 and IC7707 in relation to earth.
Now adjust the highest voltage level found with the aid of the Vg2 potentiometer (bottom left on the Line output transformer/DAF unit) to 150V ±2V.

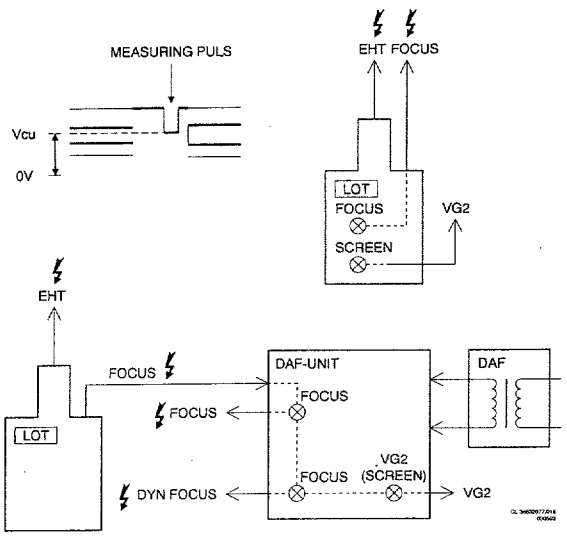

Fig. 7.1

1.7 Horizontal synchronisation

Connect point 5-IC7400 to point 9-IC7400.
Supply an aerial signal and set the receiver.
Adjust potentiometer R3406 until the picture is straight.
Break the through connection.

1.8 Horizontal centring

Feed in a test pattern that makes the horizontal linearity visible (e.g. a symmetrical cross pattern or a test circle).
Adjust the DC offset current through the horizontal deflection coil using R3513 so that the horizontal linearity is optimal (the distance between the two vertical lines should be equal on both the left and right hand sides of the picture). It is also possible to use a ruler for this purpose. The picture can then be centred using R3415.

1.9 Picture width

Set using potentiometer R3607.

1.10 Vertical centring

Set using potentiometer R3467.

1.11 Picture height

Set using potentiometer R3410.

1.12 Picture height

Movie expand on: set using potentiometer R3422.
Movie expand off: set using potentiometer R3410.

1.13 East/West correction

Set using potentiometer R3602.

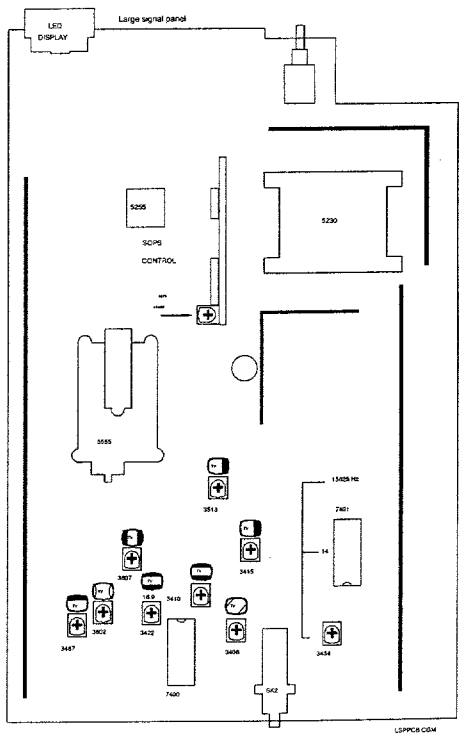

Fig. 7.2

2. E

2.1 S C si S th C U ar

2.2 4 S pc ar

2.3 E

2.3.1 C C th 4. pi os S R

2.3.2 4. C w C C S R

2.3.3 6. C E 2(C C S R

2.3.4 C C ba ea pr

2.3.5 C C ba ea pr

2.3.6 S C bl 3- C m

2. Electrical settings on the small signal panel

2.1 Stereo audio channel separation

Connect a signal generator with a 2 carrier stereo signal ("stereo" mode).
Select 1kHz for the right-hand channel and switch off the sound for the left-hand channel.
Connect an oscilloscope to pin 3 of Euroconnector EXT1
Using R3602 on the small signal panel, set the amplitude of the signal to minimum amplitude.

2.2 4.43 MHz chroma suppression circuit

Supply a colour bar signal. Connect an oscilloscope to point 17 of IC7324 and set L5305 to minimum amplitude of the chrominance signal.

2.3 Electrical settings IC7365 (TDA4650)

2.3.1 Chroma bandpassfilter

Connect a signal generator (e.g. PM 5326) to pin 20 of the euroconnector (EXT1) and set its frequency to 4.286 MHz/0.2 Vpp. Switch the unit to EXT1. Connect pin 27-IC7365 to pin 13-IC7365 (+12V). Connect an oscilloscope to pin 15-IC7365.
Set L5345 to maximum amplitude.
Remove the interconnection.

2.3.2 4.50 MHz NTSC sound suppression

Connect a generator to point 20 of Euroconnector EXT1 with a frequency of 4.50 MHz and 200mV$_{rms}$.
Connect point 26-IC7365 to point 13-IC7365.
Connect an oscilloscope to point 15 of IC7365.
Set L5346 to minimum amplitude.
Remove the short circuit.

2.3.3 6.50 MHz SECAM DK sound suppression

Connect a sine-wave generator to point 20 of Euroconnector EXT1 with a frequency of 6.50 MHz and 200mV$_{rms}$.
Connect point 28-IC7365 to point 13-IC7365.
Connect an oscilloscope to point 15 of IC7365.
Set L5346 to minimum amplitude.
Remove the short circuit.

2.3.4 Chroma 8,87 MHz auxiliary oscillator

Connect a pattern generator and supply a PAL colour bar pattern. Connect pin 17-IC7365 (TDA4650) to earth. Set C2380 so that the colour on the screen has practically stopped. Remove the interconnection.

2.3.5 Chroma 7,16 MHz auxiliary oscillator

Connect a pattern generator and supply a PAL colour bar pattern. Connect pin 17-IC7365 (TDA4650) to earth. Set R2379 so that the colour on the screen has practically stopped. Remove the interconnection.

2.3.6 SECAM demodulators

Connect a pattern generator and supply a SECAM black pattern. Connect an oscilloscope to pin 3-IC7365. Set L5370 to minimum amplitude.
Connect the oscilloscope to pin 1-IC7365. Set R3370 to minimum amplitude.

SMALL SIGNAL PANEL

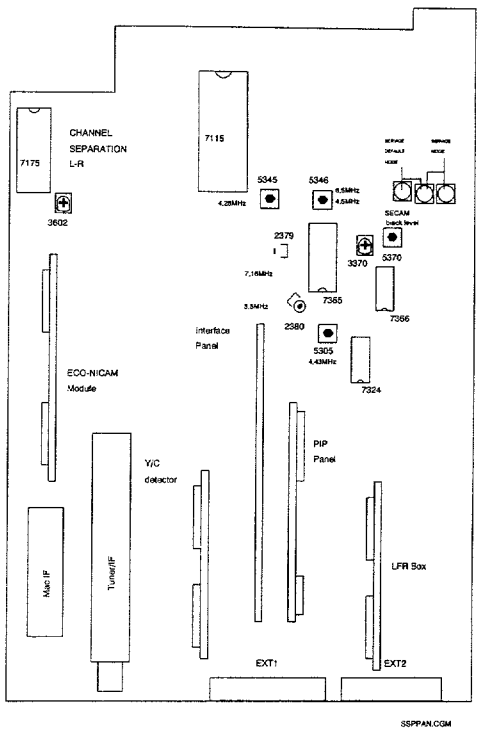

Fig. 7.3

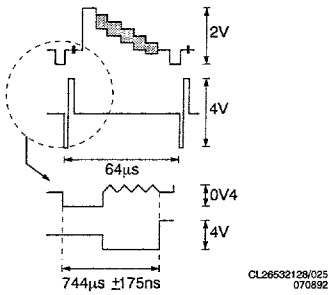

Fig. 7.4

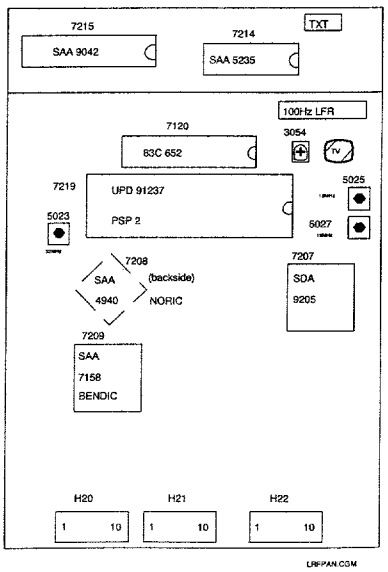

Fig. 7.5

Electrical adjustments

3. Electrical adjustments on the LFR box

3.1 Synchronisation

Connect point 5 of IC7216 to earth. Adjust R3054 until the picture is straight.
Remove the short circuit.

3.2 16MHz oscillator

Apply a PAL/SECAM signal. Measure the signals at point 1 of IC7219 and at point 5 of IC7216 simultaneously with an oscilloscope (fig. 7.9). Adjust coil L5027 so that the positive-going flank of the signal at point 1 of IC7219 comes 7.62 µsec after the negative-going flank of the sync pulse in the video signal (point 5 of IC7216).

3.3 32MHz oscillator

Force the STABLE OSD command to the microprocessor, by disconnecting the set from a possible antenna inputsignal. Measure the frequency at point 41 of IC7208. Using L5023 set the frequency to 32 MHz ±50 KHz.

3.4 12MHz oscillator

Switch on compress.
Measure the signals on point 1 of IC7219 and on point 5 of IC7216 simultaneously with an oscilloscope (fig. 7.9). Adjust coil L5025 so that the rising flank of the signal on point 1 of IC7219 comes 7.62 µsec after the negative flank of the sync pulse in the video signal (point 5 of IC7216).

4. Electrical settings on the ECO-NICAM decoder panel

4.1 Neutral frequency adjustment

Connect a frequency counter via a probe (Ci ≤15pF) to pin 19 of IC7001 (SAA 7280) and pin 15 (GND).
Adjust C2015 in such a manner that the clock frequency is set at 728.025 kHz. (±5Hz)

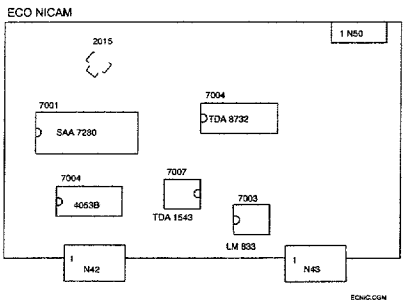

Fig. 7.6

5. Y/C detector adjustment

5.1 PAL/SECAM

Inject a chroma signal of 4.418 MHz/200mV on pin 15 of EXT2 SCART (PL05).
Connect an oscilloscope to the collector of T7266 (T7). Using L5201 adjust the 4.418 MHz signal to maximum amplitude.

5.2 NTSC

As PAL/SECAM but with a signal of 3.582 MHz/200mV. Adjust with L5200.

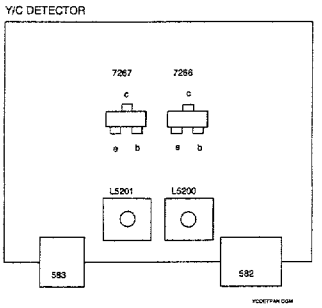

Fig. 7.7

6. Electrical settings on the PIP panel

Setting conditions

Before carrying out each setting, it should be ensured that a P.I.P. picture with colour bar is visible on the screen and the unit should have reached its operating temperature
(after ≈20 min.).

6.1 Horizontal synchronisation

Supply an aerial or generator signal.
Connect pin 28-IC7125 to pin 13-IC7125.
Connect pin 5-IC7755 to earth.
Measure the frequency on pin 17-IC7755 and set this to 15,625 Hz ±25 Hz with R3239.
Remove the short circuits.

6.2 AGC

If the picture from a strong local transmitter is distorted, adjust 3160 until the picture is not distorted.

6.3 Setting for PIP modules with TDA4554

6.3.1 Chroma bandpass filter

Connect a signal generator (e.g. PM 5326) to pin 10 of P17 and set its frequency to
4.286 MHz/0.2 Vpp.
Connect pin 27-IC7125 to 13-IC7125.
Connect an oscilloscope to pin 15-IC7125.
Set L5118 to maximum amplitude.
Remove the interconnection.

6.3.2 PAL chroma auxiliary oscillator

Connect a pattern generator and supply a PAL colour bar pattern. Connect pin 17-IC7125 (TDA4554) to earth. Set C2202 so that the colour of the PIP picture is practically still. Remove the interconnection.

6.3.3 NTSC chroma auxiliary oscillator

Connect a pattern generator and supply an NTSC M colour bar pattern. Connect pin 17-IC7125 to earth. Set C2212 so that the colour of the PIP picture is practically still. Remove the interconnection.

6.3.4 The delay line

Connect a pattern generator and supply a PAL colour bar signal. Connect the X-input of the oscilloscope to pin 1-IC7125 (TDA4554). Connect the Y-input of the oscilloscope to pin 3-IC7125 (TDA4554). Set the oscilloscope to the X-Y position.
Set L5155 and L5157 so that the vectors lie in one line (points which are furthest from the origin).
Set the pattern generator to the "DEM" mode.
Set R3157 so that the vectors lie on top of one another in the origin.

Electrical adjustments

6.3.5 SECAM identification

Connect a pattern generator and supply a SECAM colour bar signal.
Connect pin 27-IC7125 to pin 13-IC7125.
Connect an oscilloscope to pin 21-IC7125.
Adjust L5190 to maximum DC level.
Remove the interconnection.

6.3.6 SECAM demodulators

Connect a pattern generator and supply a SECAM signal without contents (black). Connect pin 27-IC7125 to pin 13-IC7125. Connect an oscilloscope to pin 1-IC7125. Using L5175, set the DC level during the scan equal to the DC level during the flyback.
In the same way set L5170, but now measure at pin 3-IC7125.
Remove the interconnection.

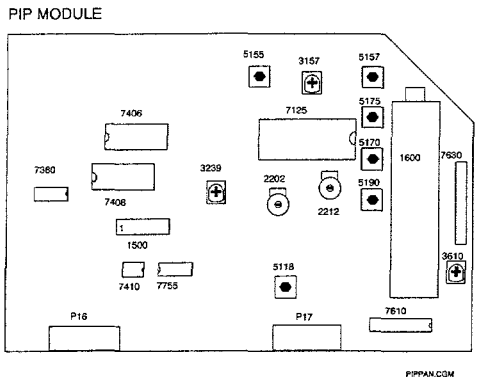

Fig. 7.8

7. Alignments in the Service Menu

The FL sets are equipped with EAROM protection. The EAROM protection will only work if pin 1 of IC7137 is high. If this point is made low by the pins of S30 on the SSP, the protection is switched off and the protected area can once more be written to. During adjustment in the service menu these pins must therefore remain connected together continuously.

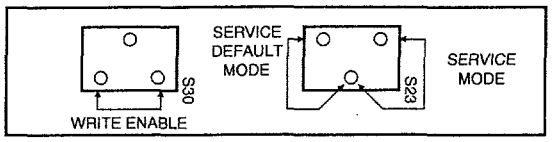

7.1 Switch in the Service Menu by momentarily connecting together pins 2S323 and 1S323 on the small signal panel (diagram H). The Service Menu will then appear on the screen. The procedure is as follows:

- *Select the required alignment with the* coloured keys A to E.
- Change the values set using the "Menu +/-" key.
- Store the values set in the EAROM and leave the Service Menu by selecting STORE.

● **The error codes are only displayed when the 'Service Mode' or the 'Service Default Mode' are switched on.**

7.2 White Drive Alignment

Switch the set into 4:3 mode.
Switch out the DNR via the remote control.
Select a white picture. (A black picture (e.g. VCR1) set at maximum brightness is also suitable).
Switch the Service Menu in.
Select the required white drive alignment by adjusting the colours red and blue in relation to green (green is the reference colour).

Remarks: In the original factory settings "white" has a colour temperature of 7600K (White with a bluish tint).
The point of departure is green with a value of 44.
The factory setting for blue is then approx. 44.
The factory setting for red is then approx. 21.

7.3 Cut-off Alignment

Switch the set into 4:3 mode.
Switch out the DNR via the remote control.
Select a black picture (e.g. VCR1).
Switch the service menu in.
Set the brightness level so that the picture just (but *clearly) illuminates.*
Using the Cut-off adjustments align the colour temperatures in such a manner that at minimum illumination of the picture they are the same as the colour temperatures at maximum brightness.
(At minimum picture illumination it is possible that one colour may dominate. This is however normal and does not have to be (fully) compensated with the cut-off alignment).

Remarks: In the original factory settings "white" has a colour temperature of 7600K (White with a bluish tint).
The point of departure is green with a value of 28.
The factory setting for blue is then approx. 33.
The factory setting for red is then approx. 25.

7.4 Option Alignment

The microprocessor communicates with a great number of components in the set. For correct communication the microprocessor has to know what IC's and modules are present in the set. This is done using option codes. An incorrectly set option code will give a communication problem and an accompanying error code. Every function has been allocated a value. The sum of 8 values forms an option code. This number can vary from 0 to 255. The option code tables are given at the end of this paragraph.

For example, a set has:

Option code 1

Function	*Value*
Front end FQ916/ME/IF	2
PIP module	8
NTSC-M	16
NICAM module	64
2nd front end on PIP module	128 +

Option code 1 is now:	**218**

Option code 2

Function	*Value*
100 Hz Digital Scan	4
100 Hz Digital Scan	64
Comb Filter	128 +

Option code 2 is now:	**196**

Option code 3

Function	*Value*
16:9 PTV	64 +

Option code 3 is now:	**64**

Option code 4:

Function	*Value*
50Hz-PIP	2
FL2/4 model	4
DAF	8
Mozaik screen on	32
Picture rotation	128 +

Option code 4 is now:	**174**

Option code 5

Function	*Value*
Third SCART (Euro AV3)	1
SCAVEM	2 +

Option code 5 is now:	**3**

Optioncode 1	
Nbr.	**Function**
0	**Front end = FQ816 / FQ916** A reception of PAL BG or PAL BG and SECAM BG is now possible
1	**Front end = FQ844 / FQ944** Only reception of the UHF band is now possible
2	**Front end = FQ816/ME/IF / FQ916/ME/IF** Reception of SECAM L but not of SECAM L' is now possible (reception of NTSC-M is now usually also possible).
4	**Front end =FQ916/MF/IF** Reception of both SECAM L and SECAM L' is now possible (NTSC M reception is generally possible now via the Euroconnector).
8	**PIP module present** This makes it possible to show PIP (Picture in Picture) displays.
16	**NTSC-M reception possible** This is normally always in combination with front end FQ816/ME/IF or FQ816/MF/IF or FQ916/ME/IF or FQ916/MF/IF
32	**SECAM DK module fitted** In this case transmissions using the SECAM DK system can also be received.
64	**NICAM module fitted** In this case the digital sound with NICAM transmission can be received.
128	**Second front end for PIP fitted** If this second front end is fitted a second transmitter can be displayed in the PIP picture. The PIP function (number 8) still applies.

Optioncode 2	
Nbr.	**Function**
1	**Not in use**
2	**Not in use**
4	**100Hz** 0 for 50Hz or 100Hz-ECO (FLx.x7) 1 for 100Hz Digital Scan (FLx.x4/FLx.x6) See number 64 further.
8-32	**Not in use**
64	**100Hz** 0 for 50Hz 1 for 100Hz-ECO (FLx.x7) 1 for 100Hz Digital Scan (FLx.x4/FLx.x6) See number 4 further.
128	**Comb-filter** Select this bit for sets with a comb-filter with IC7000 = MC141625 on the comb-filter module (number 16 of option code 4 should now be zero).

Electrical adjustments

Optioncode 3	
Nbr.	**Function**
1-32	**Not in use (SAT)**
64	**16:9 present**
128	**"Videocolor 36" Picture tube**

Optioncode 4	
Nbr.	**Function**
1	**Teletext Peaking Filter on/off for LFR box (Scandinavia)** In Scandinavia this number must be selected .
2	**50Hz-PIP in a 100Hz set** Applies to FLx.x7. Applies to Digital Scan sets (FLx.x4/FLx.x6) with the Multi-PIP possibility. (This option is 0 for the FL1.14 36" (no Multi-PIP))
4	**FL2/4 model** (see chapter 4 also)
8	**16:9 picture tube with DAF (Dynamic Astigmatic Focus)** Recognisable by the potentiometers for 'Focus' and 'VG2 (SCREEN)'; these are located on the DAF unit instead of on the high voltage transformer (LOT).
16	**Not in use**
32	**Mozaik screen on/off**
64	**Not in use**
128	**Picture rotation possible (frame rotation) (16:9)**

Optioncode 5	
Nbr.	**Function**
1	**Third SCART present**
2	**SCAVEM switchable present**
4	**Not in use**
8	**SCAVEM non switchable present**
16	**Auto TXT install enable**

8. Repair tips

1. The Service Default Mode

The FL is equipped with a service default mode. The service default mode is a fixed, definite state to which the set can be switched.

1.1 Definition state

The definition of the fixed state in the service default mode is as follows:

- all sound and picture controls are in the central position (exception volume which is turned down)
- tuned to 475.25 MHz
- system:
  * PAL/SECAM BG for Multi Europe
  * PAL I for UK
  * SECAM L for Multi French

1.2 Switch on and off

The service default mode is switched on by shorting pins 2S323 and 3S323 on the small signal panel.

The service default mode can only be switched off by switching the set to stand-by. If the set is switched off and then on again using the mains switch or the mains plug, the service default mode will remain on.

If the set switches to stand-by immediately after switching-on, the set cannot be operated and also cannot be switched to the service default mode. The child-proof lock has already been activated.
To deactivate the child-proof lock the following series of commands has to be given using the remote control (see also Section 9):
<MENU>-<BLUE>-<RED>-<MENU+>-
<MENU OFF>

1.3 Fault signals

To indicate that the set is in the service default mode, the following is displayed on the screen:

SERVICE 00 00 05 06 05

The five numbers after the word "service" stand for the last five fault signals noted by the operator(s). The number on the extreme right represents the last fault signal, that on the extreme left the last fault signal but 4. Since this enables fault reports to be looked at afterward, it means that intermittent faults can be traced.
When the set leaves the service default mode, the fault-report memory is cleared.

1.4 Operation

During the service default mode the set will accept all operating commands. When, however, the set is switched off and on, it will return to the state as defined above.

2. Error messages

The error codes are only displayed when the 'Service Mode' or the 'Service Default Mode' are switched on.

In both FL1 and FL2/4 models the I^2C error messages are indicated by a combination of flashing LED's. In FL1 7 LED's on the front of the set are used. In FL2/4 only 2 LED's have been fitted to the front of the set: 'on' and 'stand-by'; for service purposes the 7 LED's have been fitted inside the set in an SMD version. These are located on the solder side of the panel with buttons for local control. The 2 LED's on the front of the set are connected in parallel with the corresponding service LED's.

Figure 8.1 illustrates the situation for FL1 and FL2/4. A table of error messages is provided at the end of this chapter.

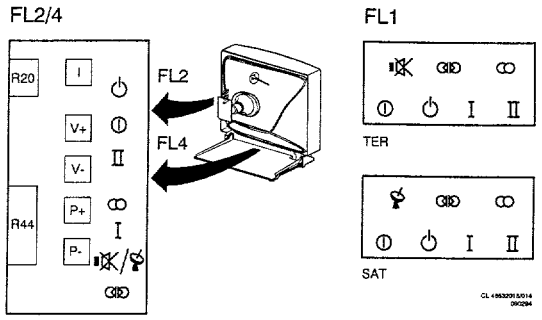

Fig. 8.1

3. Replacement of EEPROM IC7137

If, during a repair, the EEPROM has to be replaced, the microprocessor will detect that the EEPROM is empty. A fault signal (No. 21) will then be displayed.
If the service mode is now activated (see section 7), the microprocessor will load the EEPROM with a number of standard values for the white balance and the other linear settings. These values, however, must all be checked and, if necessary, re-adjusted.
All options have also to be set, the programs installed and the personal preference set.

4. Extension prints

To simplify the measurements ON the various modules extension prints are available for the modules fitted with BTB connectors. Modules can be placed in these connectors so that they stick out above the other prints when the chassis is in the service position.
The code numbers for the extension prints are:

5-fold	4822 395 30261
6-fold	4822 395 30259
8-fold	4822 214 31402
9-fold	4822 395 30258
10-fold	4822 395 30257

5. Removing the PIP module

The PIP module can be simply removed, leaving the set functioning normally (The LED display does however indicate an error condition). Following the removal of the PIP module the signal path is broken. The signal path can be restored by placing the 5-core flat cable with connector S56 in connector foot S16 (see diagram D). The error message can be removed through the application of the option codes (see chapter 7).

6. Extension cables

Extension cables are available to lead the large signal and small signal panel signals (LSP and SSP) separately out of the set. These are made up as follows:

4822 320 20209	Set of 6 cables for LSP and SSP connections.

See chapter 4 also.

7. Central repair

For panels and modules which are difficult to repair there remains a possibility for central repair. Following receipt of a defective module a repaired and tested module is issued.
In order to guarantee the quality of the central repair service a certain amount of information regarding the defective panel is required. This information should be submitted together with the defective panel. This concerns the following information:

1. Clear description of the fault
2. Indication of intermittent or continuous fault
3. Type/version number of the set
4. AG-production code and week/year number
5. Serial number

The defective modules should be complete and free of mechanical damage.
These facilities are offered for the modules below:

LFR box [L]+[M]	4822 212 31233	FL2.2X
LFR box [L]+[M]	4822 212 31313	FL2.24/58
LFR box [L]+[M]	4822 212 31314	FL2.24/62
100Hz box [L']	4822 212 31392	FL4.27

8 Diagnosis and protection

8.1 Hardware and software protection

In case any serious fault occurs in the set, one of the protection circuits will activate. A protection circuit switches of the main power supply (SOPS) via the stand-by input (STBY) of the SOPS control panel. This input is located on pin 1 of connector pin L40 with test point number TP56, and is illustrated on diagram A.
As the microprocessor is fed by a separate stand-by power supply (SOPS), the processor and the LED's will continue to operate, even when the main power supply is switched off.

A number of protection circuits can switch off the power supply independently and immediately (hardware protection). In two protection circuits the microprocessor itself switches off the power supply (software protection).

All protection circuits come together on the stand-by input (TP56 of the main power supply. A diagnosis determines which protection circuit is active.

8.2 Protection test point TP56 [diagram A]

The following voltages may be present on the stand-by input of the SOPS control panel (TP56): [see diagram A]

1	Approx. 17V	during operation;
2	0.5 - 1V	during hardware protection; (this value is maintained by a thyristor circuit formed by TS7380/TS7381);
3	0.5V	during stand-by and software protection.

8.3 Hardware protection:

1 Power supply voltage +13 from the SOPS too high (+V) [diagram A].
This protection circuit activates if the voltage in +13V circuit of the SOPS becomes too high during operation.

2 SOPS and/or +11/-11V for the audio output amplifier defective (SOUND-PROT).
[diagram G]
The protection circuit activates when the +11V and -11V voltages are no longer in balance, or when both voltages are absent. This protection circuit also operates when the SOPS does not function or is short-circuited.
This protection circuit is fed by the start-up voltage 'Vstart' from the SOPS.

3 Beam current too high (I-BEAM) [diagram B]
When the beam current becomes too high this protection circuit switches off the power supply. Before this protection circuit can activate the picture will first illuminate brightly. This fault occurs for example on the absence of the +200V power supply voltage on the picture tube panel.

4 Deviating LOT behaviour (EHT, LOT-PROT) [diagram B].
This protection circuit becomes active when a 'unusual' voltage forms appear on the LOT outputs (5555). This may indicate defective or loose components in the line deflection circuit. (LOT, switching transistors, capacitors).

5 East/west output stage defective [diagram B].
This protection circuit activates when the current through the east/west switching transistor T7610 exceeds a specific value. In this case transistor T7542 will conduct for a brief period.
(the base-emitter voltage Ube from T7542 is then momentary greater than 0.6V).

6 Vertical deflection end stage (IC7450) defective [diagram B].
The frame output stage IC7450 has a protection output (pin 7, TP62). This output becomes momentarily high on any defect in this IC or during the absence of the power supply voltage.
During normal operation there are short pulses on this output.
The frame output stage is fed by a winding on the LOT (5555) (+28V or +32V).
During diagnosis a check should be made whether the +28/+32V power supply voltage continually drops before the protection circuit output is activated. If this is the case then one of the other protection circuits is responsible for switching out the power supply.

Repair tips

By measuring the timing pulses between the protection output (pin 7) and the power supply voltage (pin 6) in relation to earth (pin 2 or 4) it can be determined whether the protection is originating from the frame output stage. The protection circuit overview at the end of this chapter provides a schematic overview of the measurements.

8.4 Software protection

8.4.1 Error message 99

Error message 99 is displayed when software protection is generated by the microprocessor. Software protection becomes active when the +13V and or +5V power supply voltage is not present on the small signal panel (SSP). Due to the absence of the power supply the connected components are unable to provide an I^2C signal to the microprocessor. The processor then sets the SOPS in stand-by. If this is the case error message 99 is then displayed.
Software protection can be switched out by activating the 'Service Default Mode' (see §1).

If the +13V or +5V are absent as a result of hardware protection switching out the power supply, error message 99 will be displayed by the LED's following a short period, as the microprocessor is no longer receiving any signal from the connected IC's. The processor now bridges the hardware protection via the STBY signal. Each hardware protection will therefore eventually result in software protection, resulting in error message 99 being displayed.

During hardware protection the microprocessor makes repeated attempts to communicate with the connected I^2C-IC's before making a decision for software protection.
During this period (up to approximately 5 minutes) the set will not react to any operational commands.
Because none of the I^2C-IC's responds in this period various error messages will be displayed by the LED's.
If error message 99 does not eventually appear then the protection circuits are not operational and the cause of the fault can be sought elsewhere.

When the microprocessor generates a STBY signal for implementing software protection TP56 will be made lower than 0.5V by the STBY signal, through which any eventual hardware protection on TP56 will be bridged.
In order to determine whether hardware protection is active via TP56 the voltage on TP56 should be measured with the set in the 'Service Default Mode' or measured before error message 99 appears on the LED display.

8.4.2 Software protection

7 +5V on the small signal panel (SSP) [diagram B and C]
To test whether the +5V power supply voltage, from the LOT winding (5555) [diagram B], is reaching the small signal panel without short-circuiting, the front-end (1160 [diagram C]) must provide a signal to the microprocessor via IC within a specific time.
If this signal does not arrive, the microprocessor switches the main power supply into stand-by, and the LED's will indicate error message 99 once more.
To test whether the front-end is defective the service default mode will have to be selected. If the power supply voltages on the front-end are correct and a front-end error message persists (error 11), then the front-end is defective.

8 +13V on the small signal panel (SSP) [diagrams A, D and F]).
To test whether the +13V power supply voltage from the main power supply (SOPS) [diagram A] is reaching the small signal panel without short-circuiting, IC7430 (TDA4680 video processor, [diagram D]) or IC7600 (TDA8417, stereo decoder, [diagram F]) or IC7680 (TDA8425, audio processor [diagram F]) must provide a signal via I^2C to the microprocessor within a specific time. If none of these three IC's provides any signal the microprocessor switches the main power supply into stand-by. The LED's indicate error code 99.

9 SAT box power supply defective (only for set with a SAT box (D2-MAC)).
When the SAT box microprocessor does not send a signal to the main processor in the set, the main processor, following error message 51 (SAT box processor), will switch the software protection in. The LED's now indicate error code 99.
To test whether the SAT box processor is defective the service default mode must be selected. If only the error message from the SAT box is now indicated (error 51), and all power supply voltages on the processor are correct, then the SAT box processor is defective.
The operation of the SAT box power supply [diagram O] can be checked as followed:
Disconnect the SAT box and chassis from one another by disconnecting the band cable between the interface panel [diagram P] and the SAT box [diagram O].
When after a short time the set can be started up from stand-by the SAT box will have an incorrect power supply and error message 99 does not appear.

8.5 Measurements in the protection circuits.

All hardware circuits are illustrated in figure 8.2.
The oscillograms indicate the voltages on the relevant test points immediately after the set is switched on.
In this case the signals illustrated are for during:
- normal operation
- protection caused by this circuit (PROT);
- protection caused by another protection circuit (N-PROT).

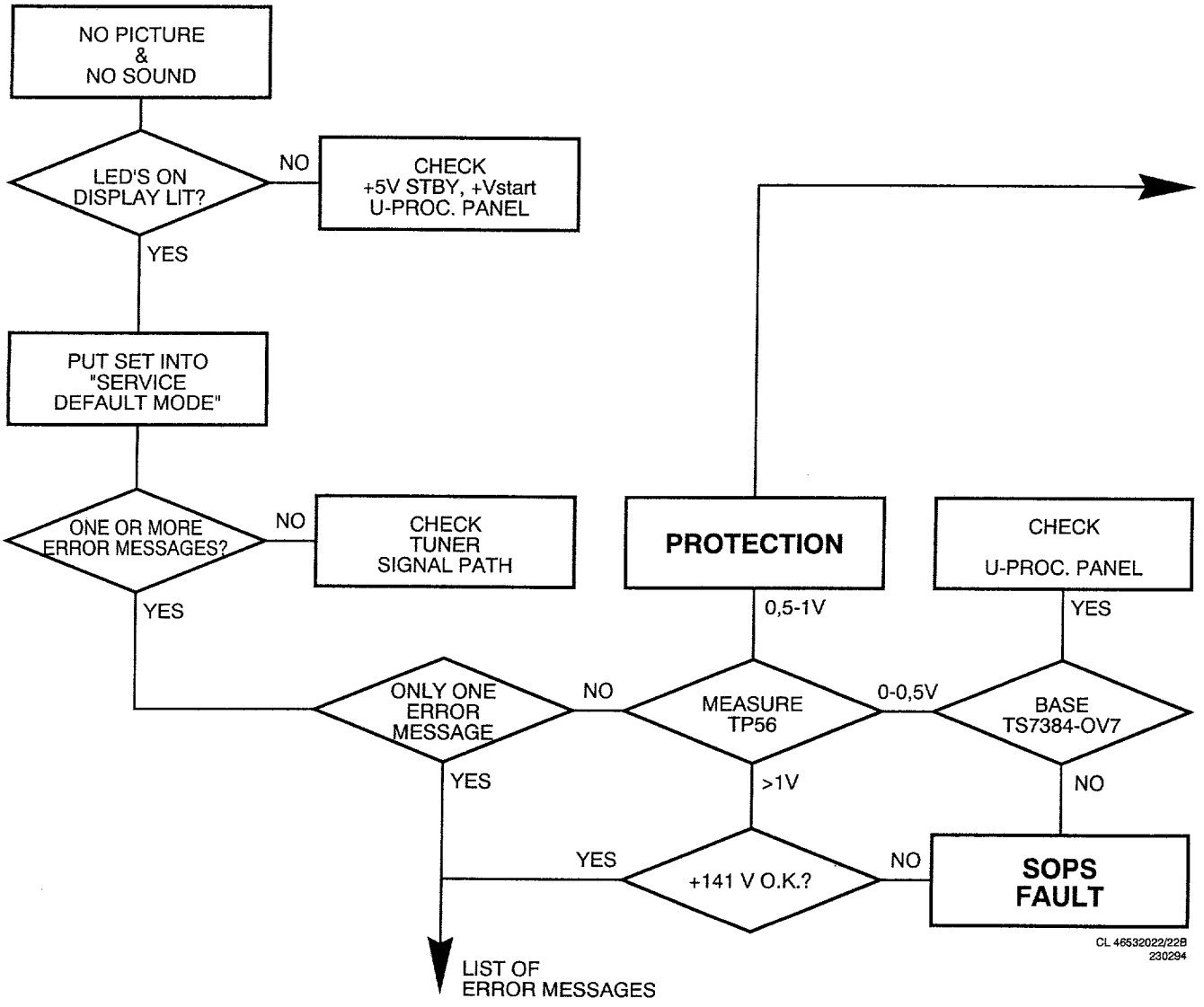
NO PICTURE
&
NO SOUND
LED'S ON
DISPLAY LIT?
NO
CHECK
+5V STBY, +Vstart
U-PROC. PANEL
YES
PUT SET INTO
"SERVICE
DEFAULT MODE"
ONE OR MORE
ERROR MESSAGES?
NO
CHECK
TUNER
SIGNAL PATH
YES
PROTECTION
0,5-1V
CHECK
U-PROC. PANEL
YES
ONLY ONE
ERROR
MESSAGE
NO
MEASURE
TP56
0-0,5V
BASE
TS7384-OV7
YES
>1V
NO
YES
+141 V O.K.?
NO
SOPS
FAULT
LIST OF
ERROR MESSAGES
CL 46532022/22B
230294

+11 V
-11 V

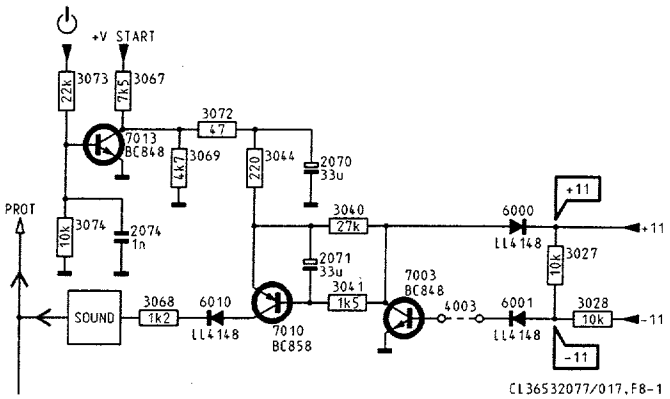

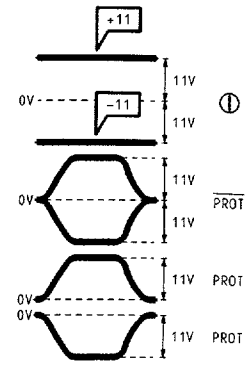

EHT

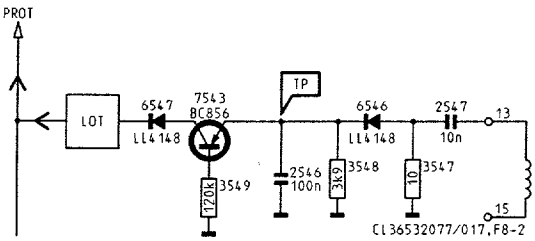

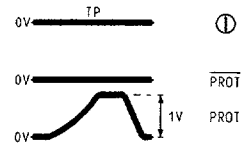

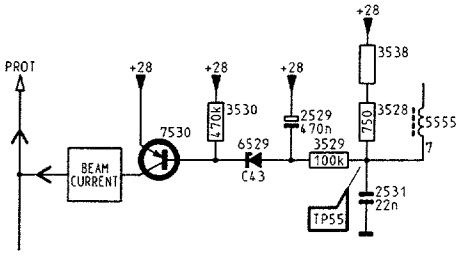

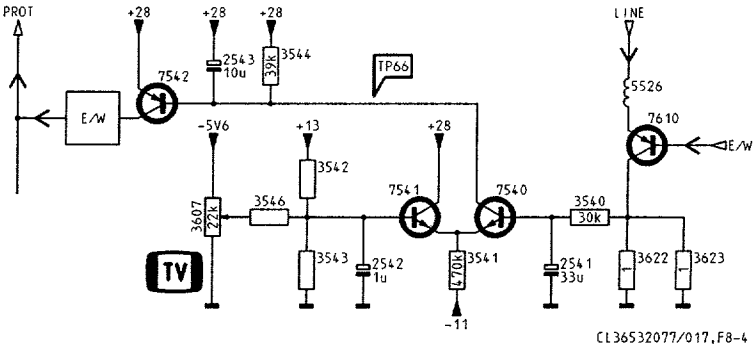

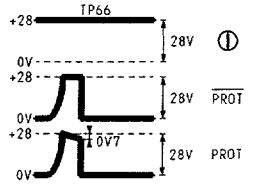

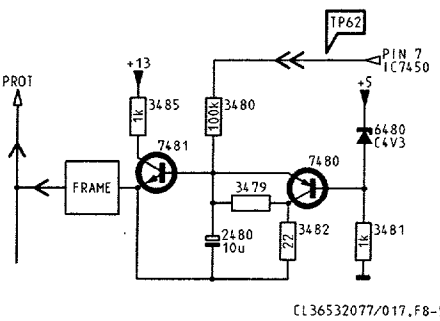

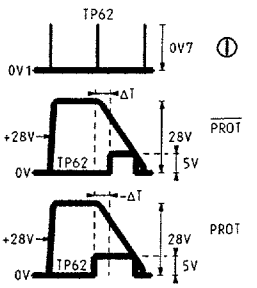

+V

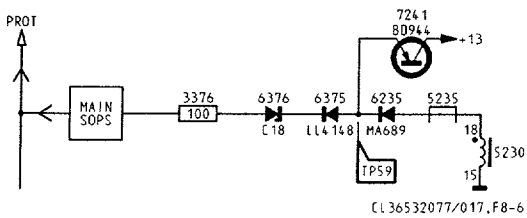

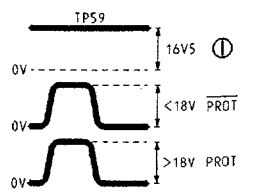

Fig. 8.2

CL36532077/017.FREF
130593

46532022/22B
230294

List of error messages

Error number on screen	Flashing LED							Description of error
	🔇			⏻		I	II	
1[1]			X		X	X		I²C, IC7108, SSP [H] (MSM6307)
3					X	X		I²C, IC7215, 100Hz SAA 9042 [L] I²C, IC7111, TXT SAA 9042 [L']
4				X		X		I²C, IC7220, 100Hz [M] [L'} J83C652
5				X			X	I²C, IC7408, PIP [J] (SDA9088)
6				X	X	X		I²C, IC7600, SSP [F] (TDA8417)
7							X	I²C, IC7680, SSP [F] (TDA8425)
8						X	X	IC7440, frame rotation [Y], PCF8574 (16:9)
9			X	X		X		I²C, IC7430, SSP [D] (TDA4680)
10				X	X		X	I²C, IC7395, SSP [D] (TDA8443)
11				X	X			I²C, front-end, SSP [C] (FQ 9XX)
12						X		I²C, IC7137, SSP [H] (X24C04)
13			X					I²C, bus on chassis blocked
14			X	X				I²C, IC7258, SSP [C] (HEF4094)
15			X	X	X			I²C, IC7219, SSP [C] (TEA6414)
16			X			X		I²C, IC7040, SAT Interface [P] (TEA6414)
17			X		X			IR-receiver on SSP [H] blocked (1100)
18				X		X	X	7115, SSP, µ proc. [H]
19			X	X	X	X		UART Bus blocked, 7115, SSP, µ proc. [H]
20				X	X	X	X	7115, SSP, µ proc. [H]
21				X				EAROM X24C08 empty, IC7137, SSP [H] (§ 8.3)
23	X				X			I²C, IC7080, convergence panel [V] (TDA8444) (PTV)
28		X						I²C, PIP tuner [J]
29		X			X			I²C, IC7638, PIP-modulo [J] (SAA1300)
30			X		X		X	I²C, IC7175, SSP [C] (PCF8574)
31			X		X	X	X	I²C, IC7001, NICAM-panel [K] (SAA7280)
33		X		X				I²C, PLL (1500) PIP modulo [J]
34[1]	X		X				X	LNC supply on SAT box [Q,R] not correct
35[1]	X		X		X		X	IM-bus on SAT box [Q,S] blocked
36[1]	X		X	X			X	I²C, bus on SAT box blocked
37[1]	X		X	X	X		X	I²C, IC7450, D2-MAC [S] (X24C02)
38[1]	X		X			X	X	I²C, SAT Tuner [Q] (SF914; SF916)
39[1]	X		X		X	X	X	HEF STROBE 1, IC7925, FSS [T] (HEF4094)
40[1]	X		X	X		X	X	D2-MAC [S]
41[1]	X		X	X	X	X	X	HEF STROBE 2, IC7475, D2-MAC [S] (HEF4094)
42[1]	X				X		X	IC7250, TUNER/CONTROL [Q]
43[1]	X			X			X	UART bus blocked IC7250, TUNER/CONTROL [Q]
44[1]	X			X	X		X	SAT Tuner [Q] (SF914/916)
45[1]	X					X	X	IC7250, TUNER/CONTROL [Q]
46[1]	X				X	X	X	IC7250, TUNER/CONTROL [Q]
47[1]	X			X		X	X	IC7262, TUNER/CONTROL [Q]
48[1]	X			X	X	X	X	D2-MAC [S]
49[1]	X			X		X		EAROM X24C02 empty, 7450, D2-MAC [S] (§17)
51[1]					X	X	X	IC7250, TUNER/CONTROL [Q]
52[1]			X				X	D2B Bus EXT, SSP [H] blocked.
53			X			X	X	IC7330, MAC TXT [S], TPU2735
55			X	X		X	X	IC7140, Panorama [B], PCF8574 (16:9)
99	X		X		X			Protection

[1] This error is only possible on sets with built in SAT box.

- **The error codes are only displayed when the 'Service Mode' or the 'Service Default Mode' are switched on.**
  In case an error indication on the set is not included in this table, then check the optional codes (see § 7).